ORDER No.AD0101008C2

Service Manual

Portable MD Player

SJ-MJ88

MD unit: RAE1611Z Mechanism Series

Colour

(S).....Silver Type

Areas

EB.....Great Britain.

EG.....Europe.

Downloaded from www.Manualslib.com manuals search engine

SPECIFICATIONS

Specifications

● **Audio**

System:	MiniDisc digital audio system
Laser:	Semiconductor laser (=780 nm)
Sampling frequency:	44.1 kHz
Coding:	Adaptive Transform Acoustic Coding (ATRAC)
No. of channels:	2 (left and right, stereo)
	1 (monaural)
Frequency response:	20 Hz~20 kHz (+0 dB, -8dB)
Wow and flutter:	Below measurable limit

● **General**

Output terminal	
Output Jack:	Phones, 22 Ω
Power output:	3.5 mW+3.5 mW
Power supply	
Rechargeable battery:	DC 1.2V
	(included rechargeable battery)
Battery:	DC 1.5V (One LR6, AA, UM-3 battery)
Dimensions (WxHxD)	
Cabinet dimensions:	71.5x78.5x11.8 mm
incl.projecting parts:	74.1x80.1x13.9 mm
Weights:	79 g (with battery)
	54 g (without battery)

● **Play time**

(When used in hold mode, at 25°C, on a flat, stable surface)

Battery type:	Play time
Rechargeable:	About 18 hours

Downloaded from www.Manualslib.com manuals search engine

Panasonic alkaline:	About 70 hours
Both together:	About 88 hours

● Charger

Input:	AC120-240 V (EG) / AC 230-240V (EB), 50 Hz 4W
Output:	DC 340mA (EG)/DC 350mA (EB), 1.2V
Recharging time:	About 2 hours

Notes:

- The play time may be less depending on the operating conditions.
- Specifications are subject to charge without notice. Weight and dimensions are approximate.

⚠ WARNING

This service information is designed for experienced repair technicians only and is not designed for use by the general public. It does not contain warnings or cautions to advise non-technical individuals of potential dangers in attempting to service a product. Products powered by electricity should be serviced or repaired only by experienced professional technicians. Any attempt to service or repair the product or products dealt with in this service information by anyone else could result in serious injury or death.

Panasonic®

1. Accessories

- Stereo earphones.....1 pc.
  (L0BAB0000162)
- Wired remote control.....1 pc.
  (RFEV025P-SM)
- External battery case.....1 pc.
  (K3ZZ00200038)
- Rechargeable Ni-Cd battery.....1 pc.
  (RP-BP62EYS1)

Downloaded from www.Manualslib.com manuals search engine

- **Carrying case.....1 pc.**
  (RFC0056-K)

For EB area

- **Charger.....1 pc.**
  (RP-BC155AEBY)

For EG area

- **Charger.....1 pc.**
  (RP-BC155AEYB)

2. Precaution of Laser Diode

CAUTION:

This product utilizes a laser diode with the unit turned "on", invisible laser radiation is emitted fromthe pickup lens.
Wave length:780 nm
Maximum output radiation power from pickup: 100 μ W/VDE
Laser radiation from the pickup lens is safety level,but be sure the followings:

1. Do not disassemble the optical pickup unit, since radiation from exposed laser diode is dangerous.
2. Do not adjust the variable resistor on the pickup unit. It was already adjsuted.
3. Do not look at the focus lens using optical insturments.
4. Recommend no to look at pickup lens for a long time.

ACHTUNG:

Dieses Produkt enthält eine Laserdiode. Im eingeschalteten Zustand wird unsichtbare Leserstrahlung von der
Laserinheit adgestrahit.
Wellenlänge: 780 nm
Maximale Strahlungsleistung der Lasereinheit: 100 μ W/VDE
Die Strahlungan der Lasereinheit ungefährlich, wenn folgende Punkte beachtet werden:

1. Die Lasereinheit nicht zerlegen, da die Strahlung an der freigelegten Laserdiode gefährlich ist.
2. Den werkseitig justierten Einstellregler der Lasereinhit nicht verstellen.
3. Nicht mit optischen Instrumenten in die Fokussierlines blicken.
4. Nicht über längere Zeit in die Fokussierlines blicken.

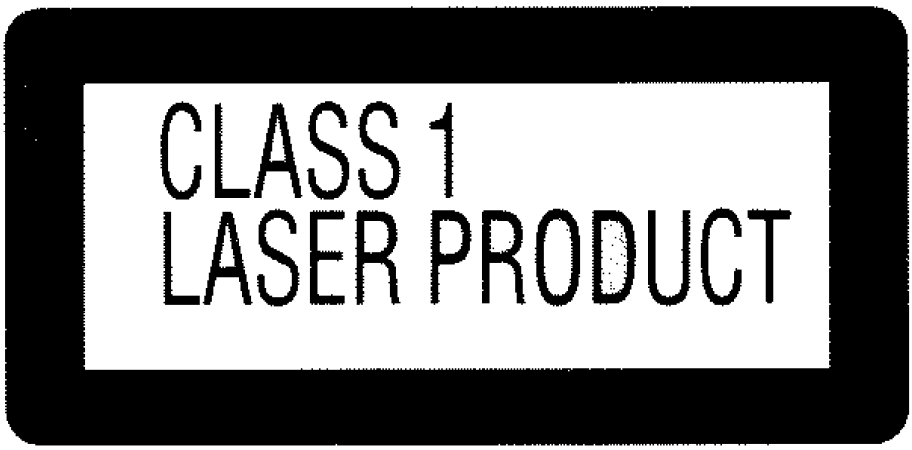

LUOKAN 1 LASERLAITE
KLASS 1 LASER APPARAT

Downloaded from www.Manualslib.com manuals search engine

DANGER	INVISIBLE LASER RADIATION WHEN OPEN. AVOID DIRECT EXPOSURE TO BEAM.
ADVARSEL	USYNLIG LASERSTRÅLING VED ÅBNING, NÅR SIKKERHEDSAFBRYDERE ER UDE AF FUNKTION. UNDGÅ UDSÆTTELSE FOR STRÅLING.
VARO!	AVATTAESSA JA SUOJALUKITUS OHITETTAESSA OLET ALTTIINA NÄKYMÄTÖNTÄ LASERSÄTEILYLLE. ÄLÄ KATSO SÄTEESEEN.
VARNING	OSYNLIG LASERSTRÅLNING NÄR DENNA DEL ÄR ÖPPNAD OCH SPÄRREN ÄR URKOPPLAD. BETRAKTA EJ STRÅLEN.
ADVARSEL	USYNLIG LASERSTRÅLING NÅR DEKSEL ÅPNES OG SIKKERHEDSLÅS BRYTES. UNNGÅ EKSPONERING FOR STRÅLEN.
VORSICHT	UNSICHTBARE LASERSTRAHLUNG, WENN ABDECKUNG GEÖFFNET. NICHT DEM STRAHL AUSSETZEN.

3. Operating Instructions

4. Handling Precautions for Traverse Deck

The laser diode in the traverse deck (optical pickup) may break down due to potential difference caused by static electricity of clothes or human body. So, be careful of electrostatic breakdown during repair of the traverse deck (optical pickup).

4.1. Handling the traverse deck (optical pickup)

1. **The traverse deck (optical pickup) is an extremely high-precision construction and must not be subjected to impact, excessive vibration, or other types of rough handling.**
2. **In order to prevent static electricity damage to the laser diode, use a short pin or similar tool to short the optical pickup's flexible circuit boards after they have been disconnected from the main circuit board. (as shown in Fig. 1)**
3. **Handle the flexible circuit boards with care; excessive force could cause them to be broken.**
4. **Do not turn the pre-set variable resistor (for adjustment of the laser power); it has been adjusted at the factory.**
   (as shown in Fig. 2)

Downloaded from www.Manualslib.com manuals search engine

Fig. 1

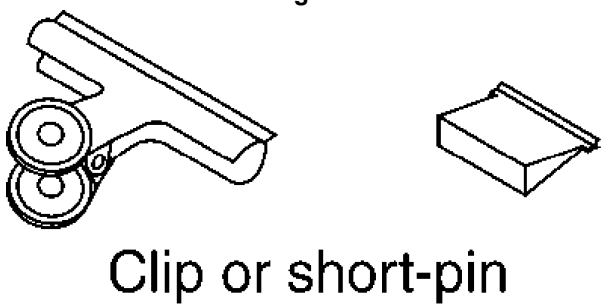

Fig. 2

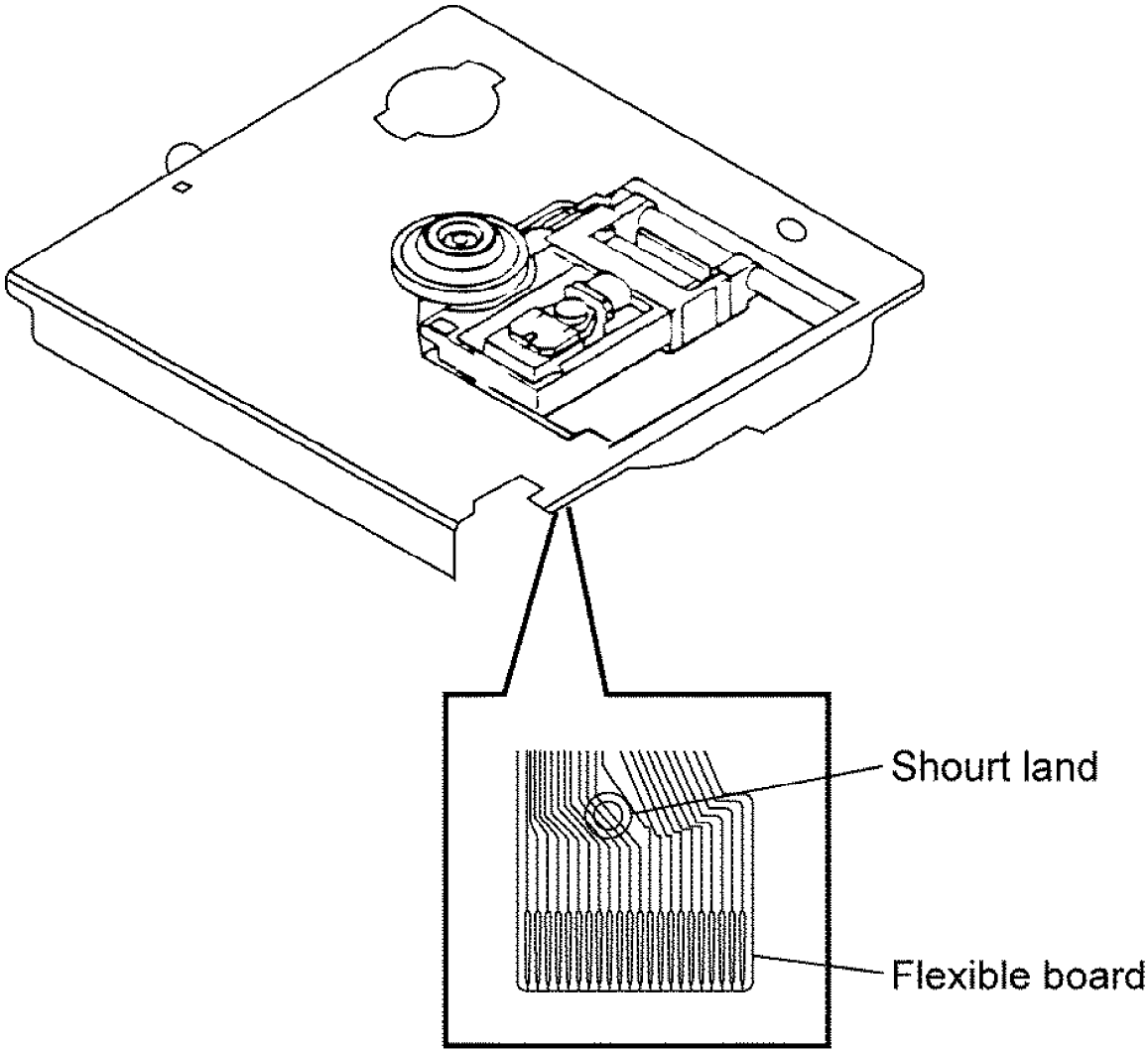

4.2. Grounding for electrostatic breakdown prevention

1. Human body grounding

Downloaded from www.Manualslib.com manuals search engine

Use the anti-static wrist strap to discharge the static electricity from your body. (as shown in Fig. 3)

2. Work table grounding

Put a conductive material (sheet) or steel sheet on the area where the traverse deck (optical pickup) is placed, and ground the sheet. (as shown in Fig. 4)

Caution

The static electricity of your clothes will not be grounded through the wrist strap.

So, take care not to let your clothes touch the traverse deck (optical pickup).

Fig. 3

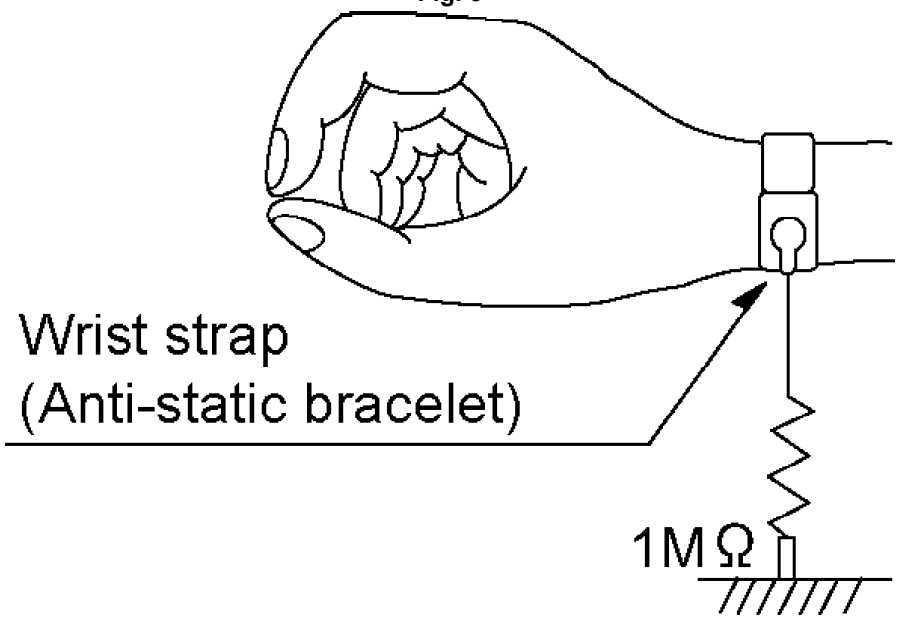

Fig. 4

Downloaded from www.Manualslib.com manuals search engine

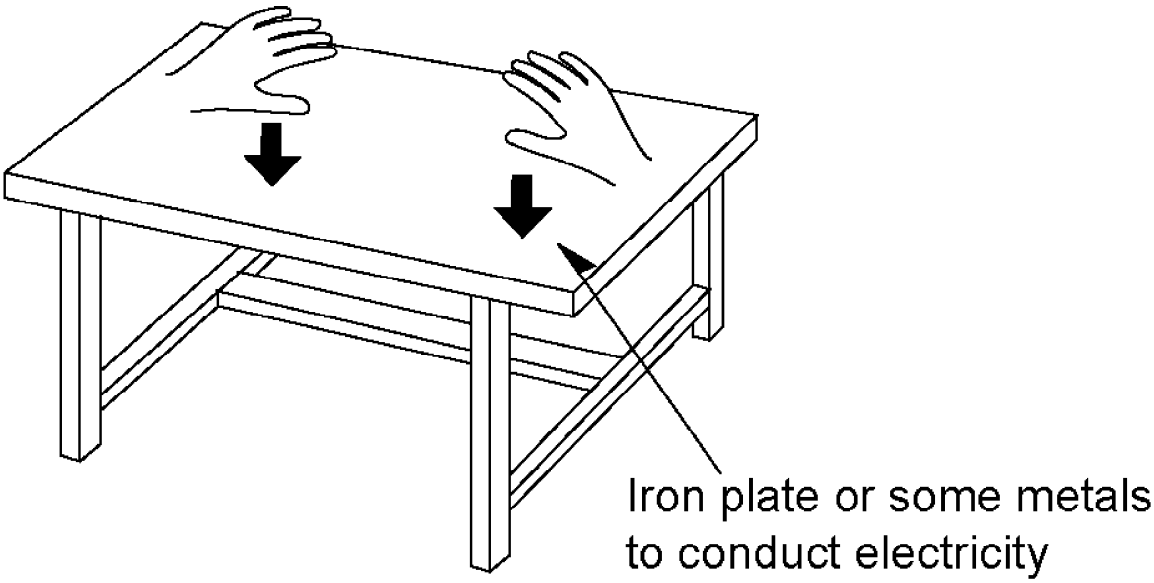

5. Operation Checks and Component Replacement Procedures

- **This section describes procedures for checking the operation of the major printed circuit boards and replacing the main components.**
- **For reassembly after operation checks or replacement, reverse the respective procedures. Special reassembly procedures are described only when required.**
- **After replacing the main components (optical pickup or traverse motor, etc.) of mechanism unit block, change to the adjust mode, and then perform the "ROM/RAM auto-adjustment".**

5.1. Checking for the P.C.B.

Downloaded from www.Manualslib.com manuals search engine

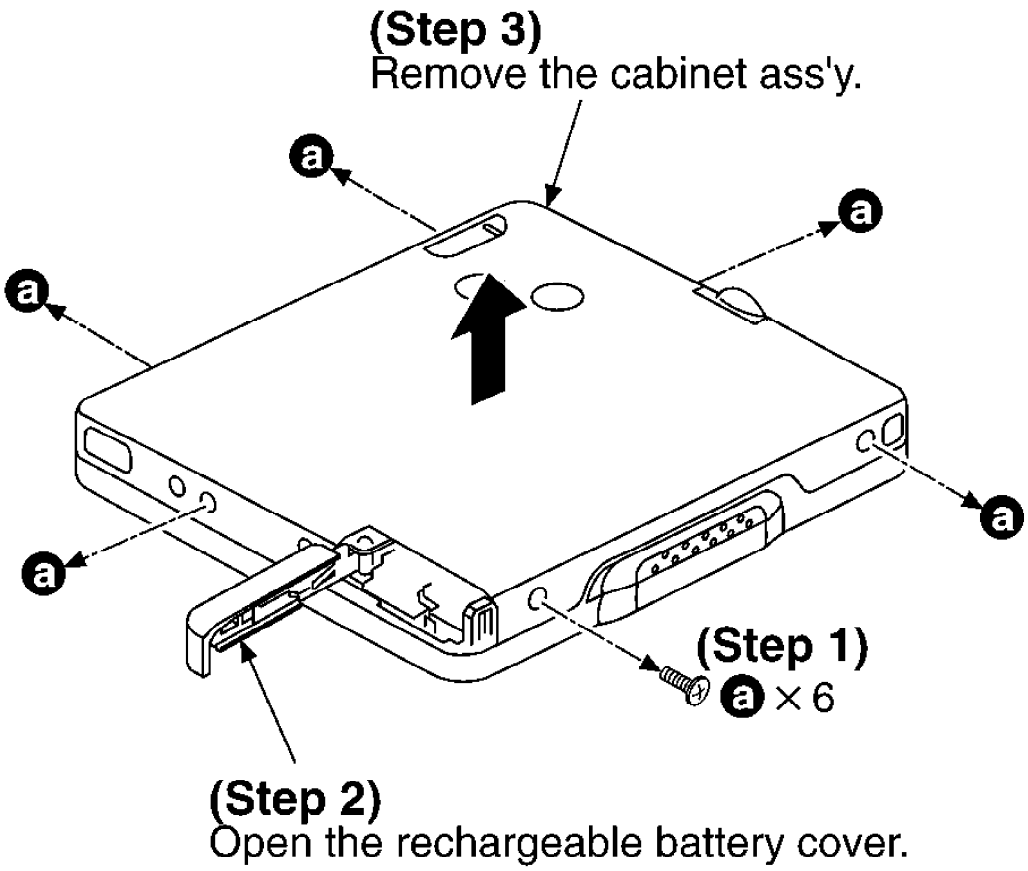

Downloaded from www.Manualslib.com manuals search engine

(Step 4)
Store the rechargeable battery,
and then close the battery cover.

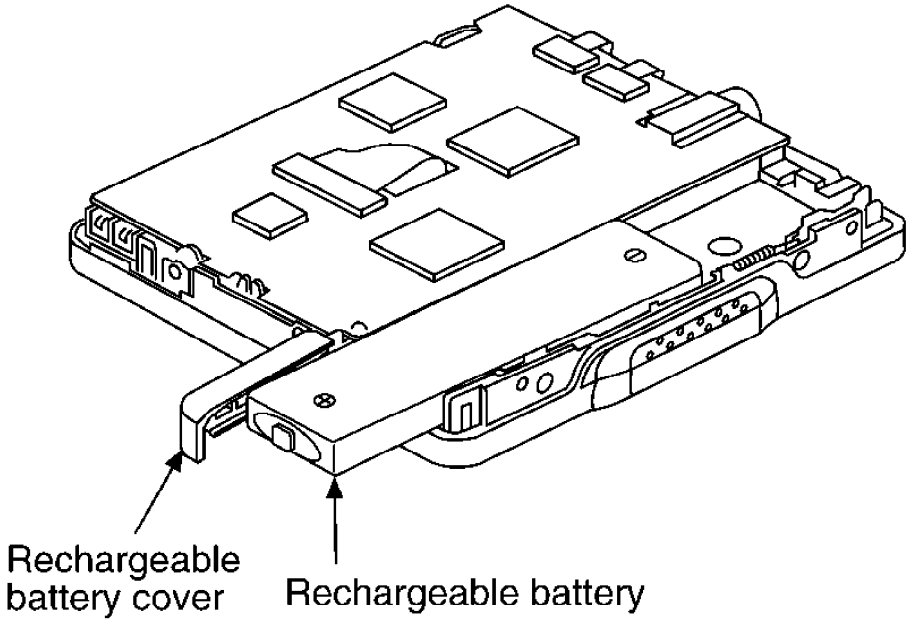

NOTE:
The rechargeable battery
should be recharged fully.

- **Check the P.C.B. as shown below.**

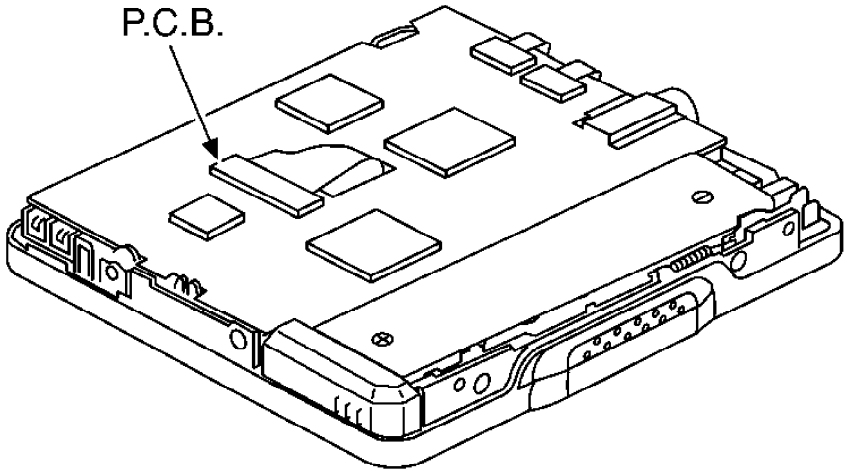

Downloaded from www.Manualslib.com manuals search engine

Notice for installation of the cabinet ass'y

- Make sure the boss of switch are fit in the hold knob when assembling.

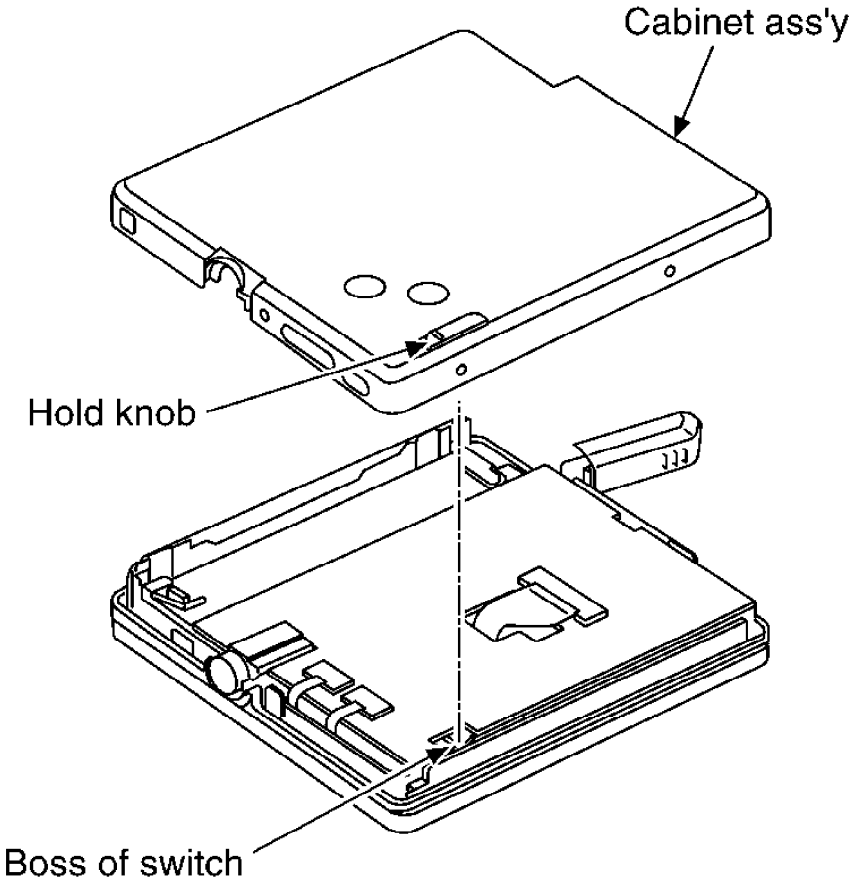

5.2. Replacement for the lock unit, open knob and intermediate cabinet

- **Follow the (Step 1) - (Step 3) of item 5.1.**

Downloaded from www.Manualslib.com manuals search engine

(Step 1)
Release the calw, and then remove the P.C.B. and mechanism unit.

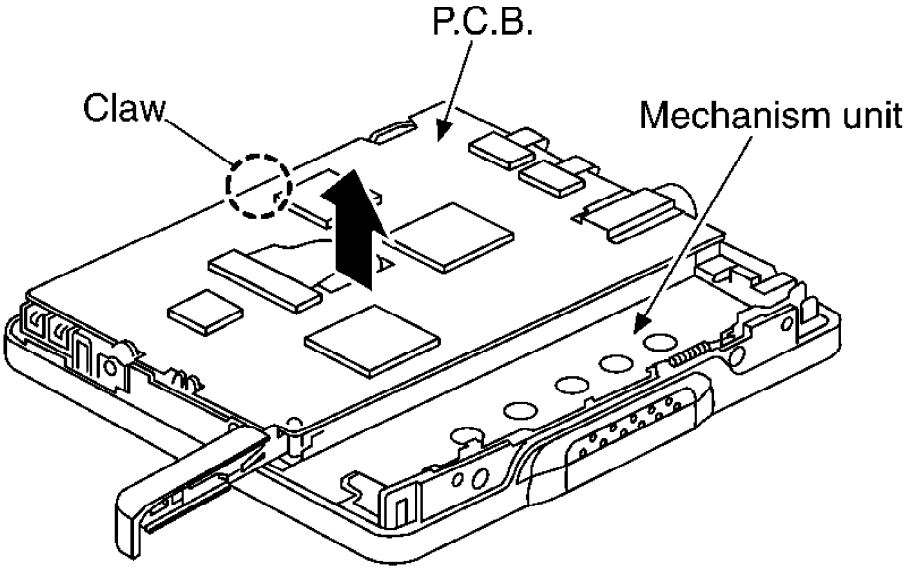

NOTE:
Locate the mechanism unit as the turn table is faced up.

(Step 2)
Push the open knob, and then remove the intermediate cabinet ass'y from the disc cover ass'y.

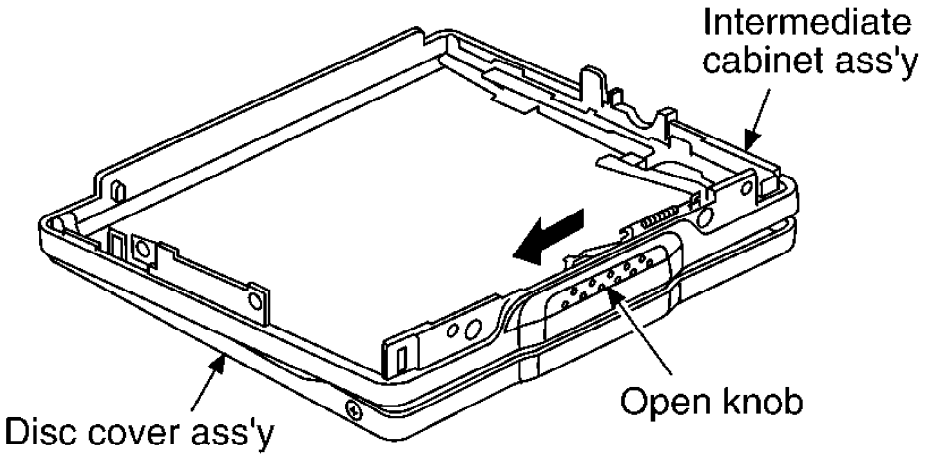

Downloaded from www.Manualslib.com manuals search engine

(Step 3)
Remove the intermediate cabinet ass'y.

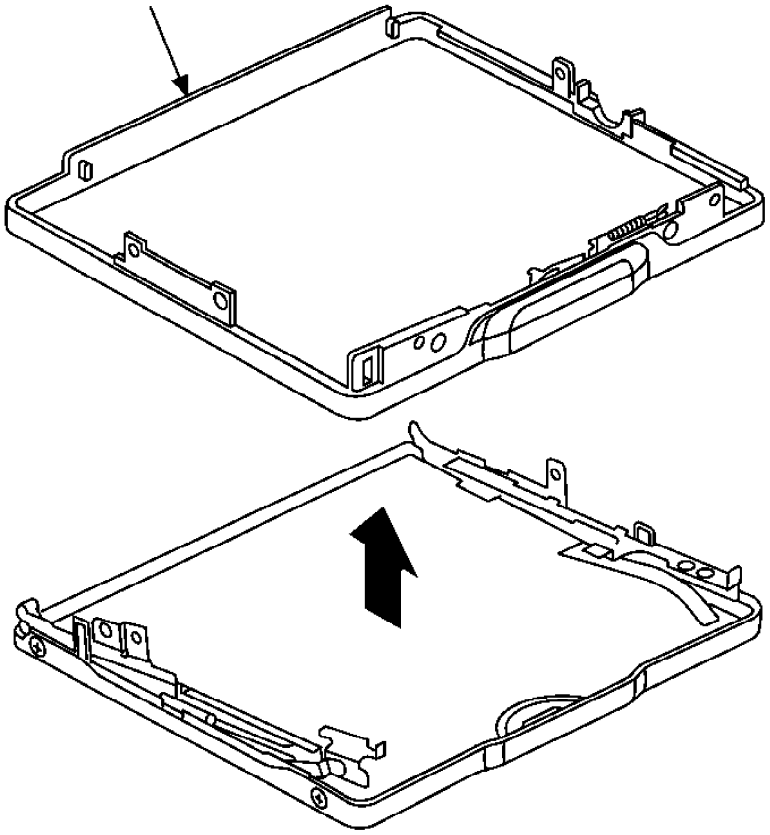

Downloaded from www.Manualslib.com manuals search engine

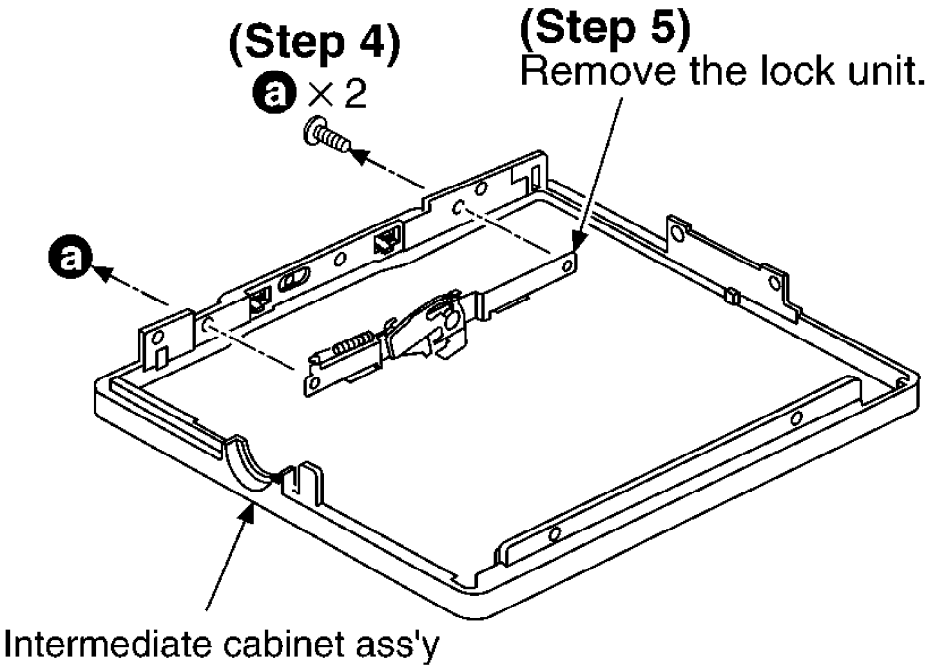

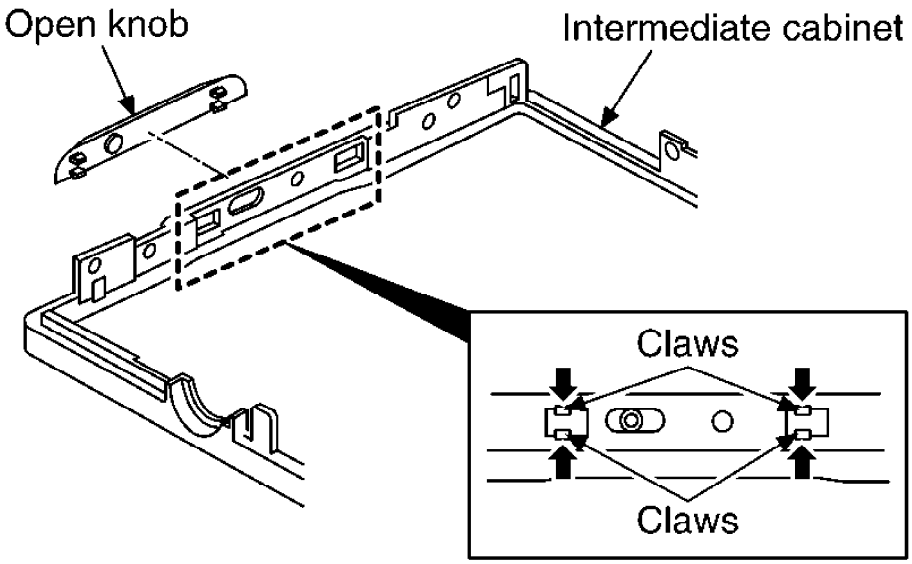

(Step 6)
Release the 4 claws, and then remove the open knob.

Downloaded from www.Manualslib.com manuals search engine

Notice for installing the lock unit

Make sure the boss of lock unit are fit in the hole of open knob when assembling.

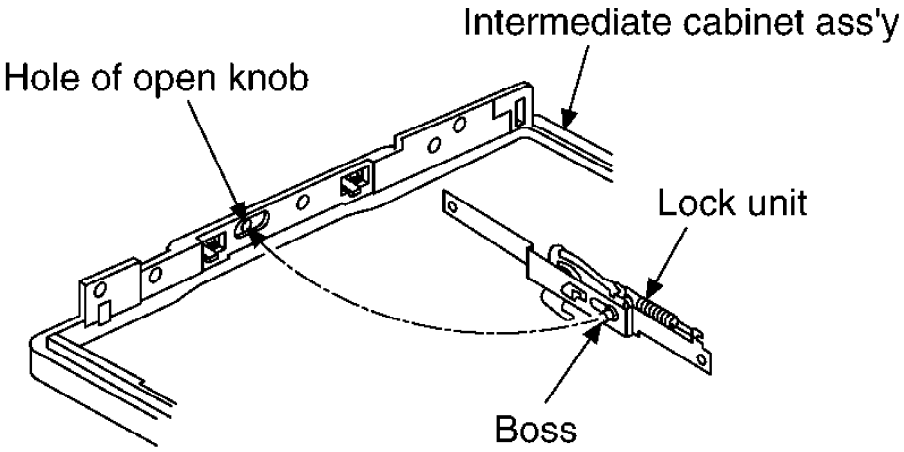

5.3. Replacement for the disc cover ass'y

- **Follow the (Step 1) - (Step 3) of item 5.1.**
- **Follow the (Step 1) - (Step 3) of item 5.2.**

Downloaded from www.Manualslib.com manuals search engine

(Step 2)
Remove the link units (L) and (R).

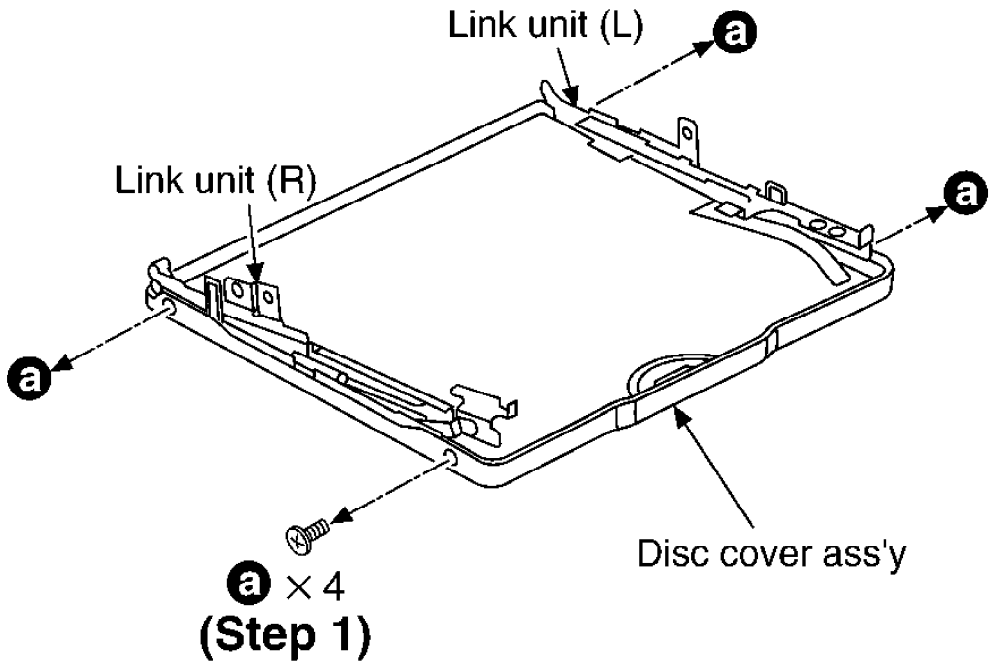

5.4. Replacement for the traverse motor

- **Follow the (Step 1) - (Step 3) of item 5.1.**

Downloaded from www.Manualslib.com manuals search engine

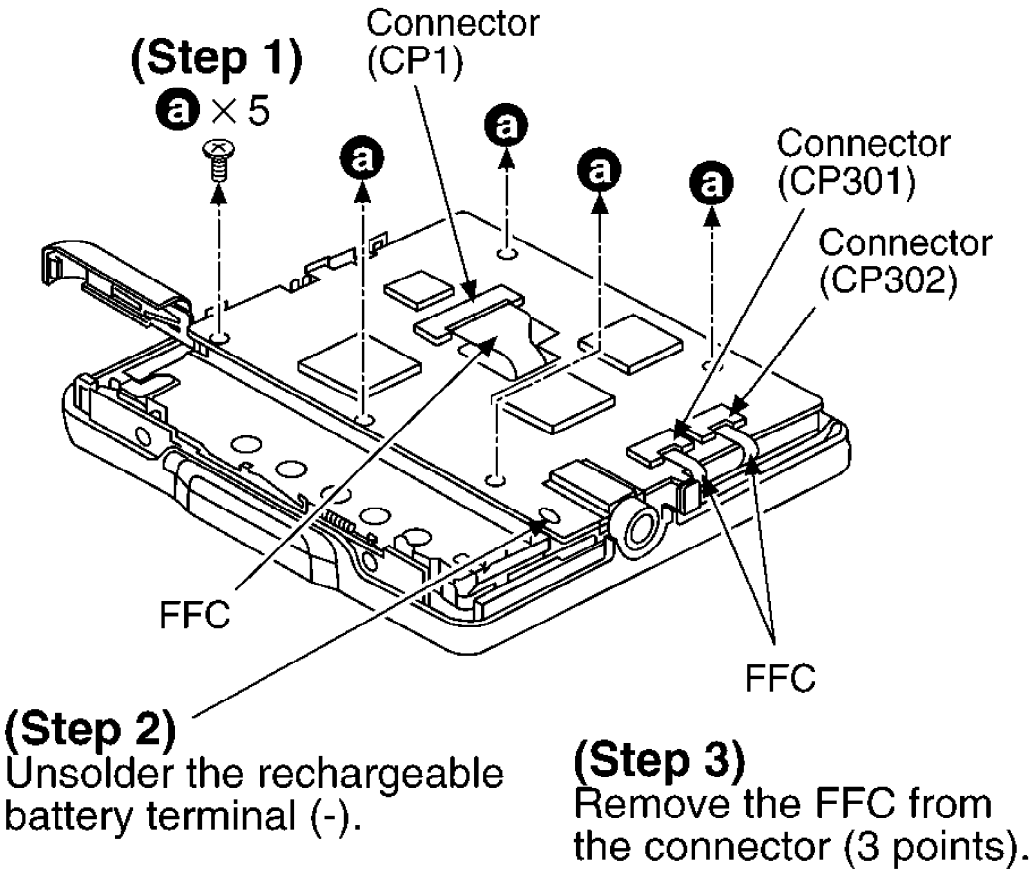

Downloaded from www.Manualslib.com manuals search engine

(Step 4)
Remove the P.C.B..

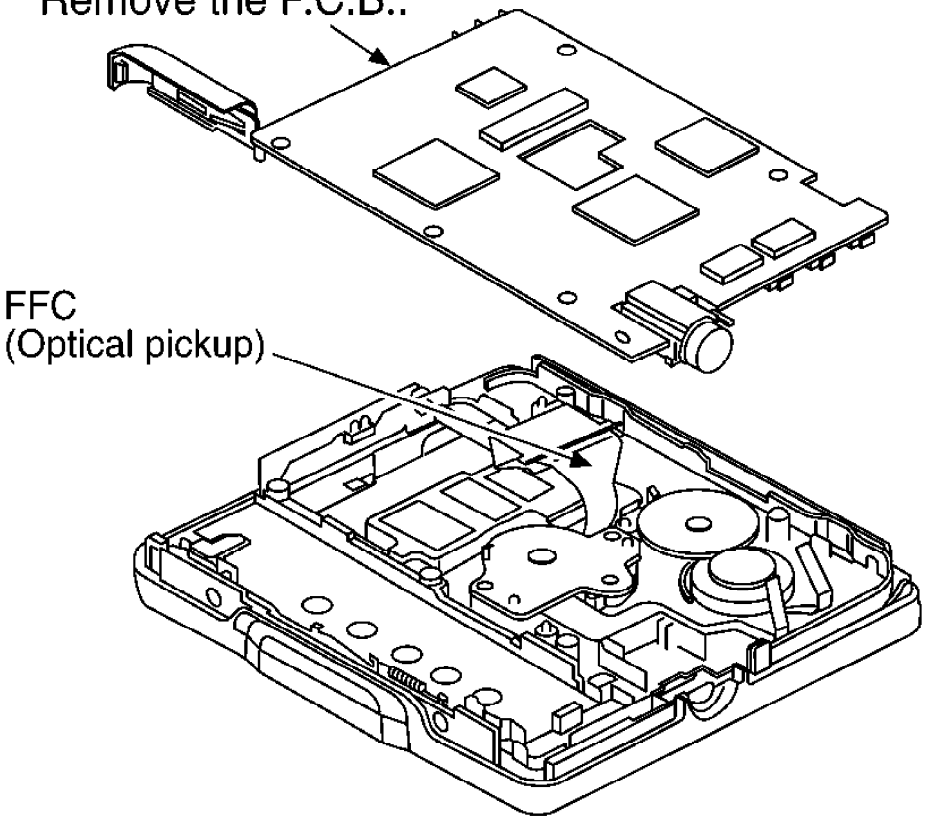

NOTE:
Insert a short pin into the traverse unit FFC board.
(Refer to "Handling Precautions for Traverse Deck".)

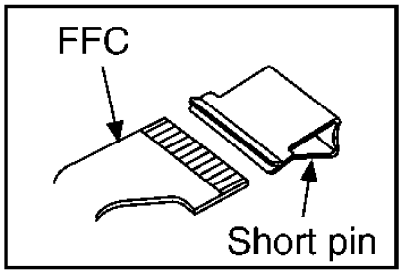

Downloaded from www.Manualslib.com manuals search engine

(Step 5)

Remove the washer, and then pull out the intermediate gear.

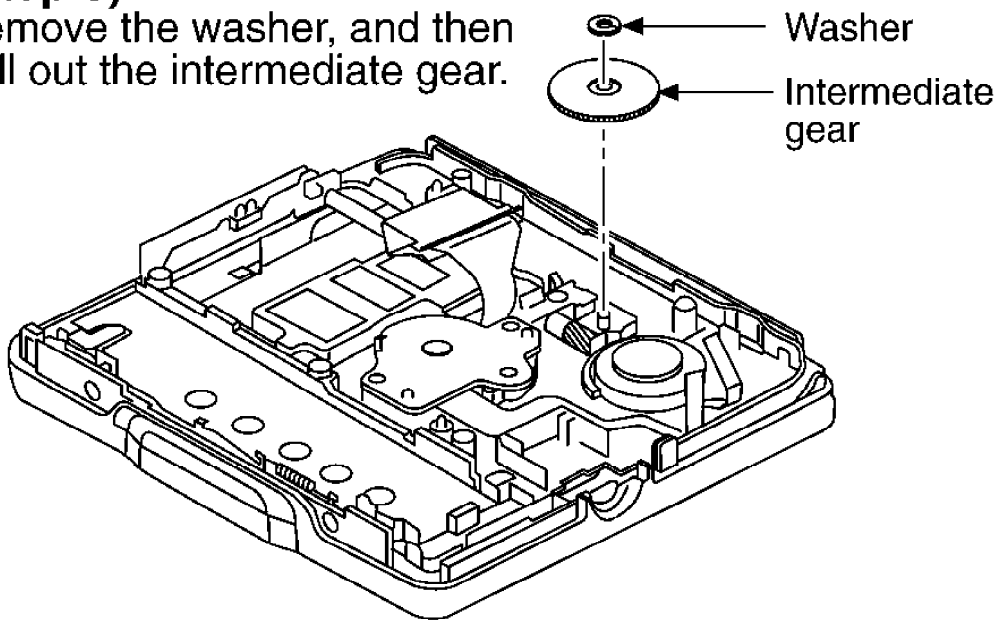

Downloaded from www.Manualslib.com manuals search engine

(Step 7)
Release the traverse motor from the hook, and then remove it in the direction of arrow.

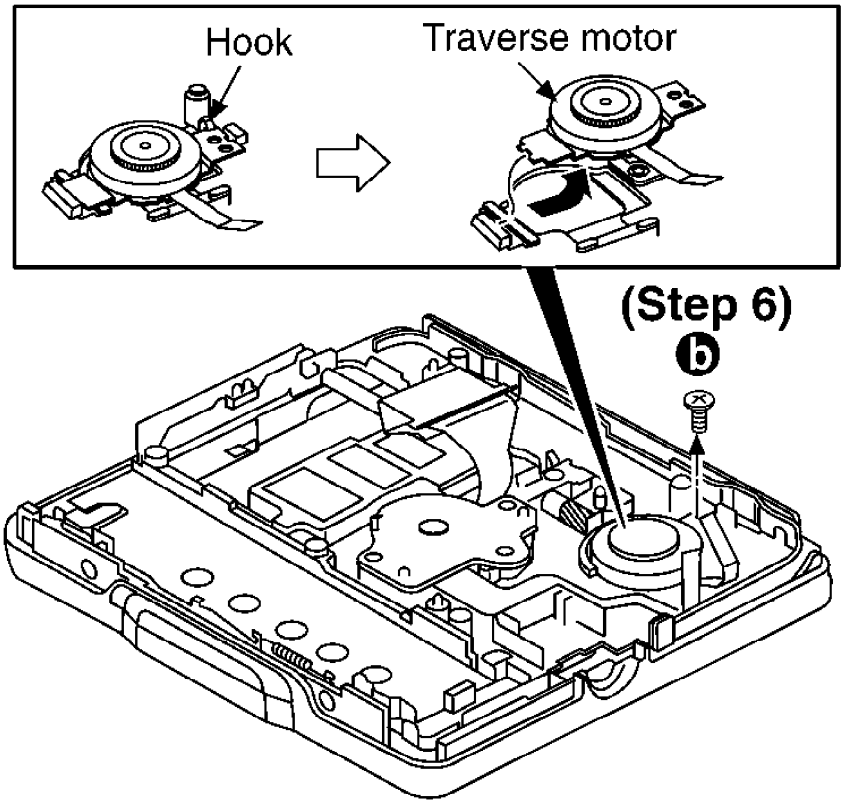

5.5. Replacement for the optical pickup

- **Follow the (Step 1) - (Step 3) of item 5.1.**
- **Follow the (Step 1) - (Step 5) of item 5.4.**

Downloaded from www.Manualslib.com manuals search engine

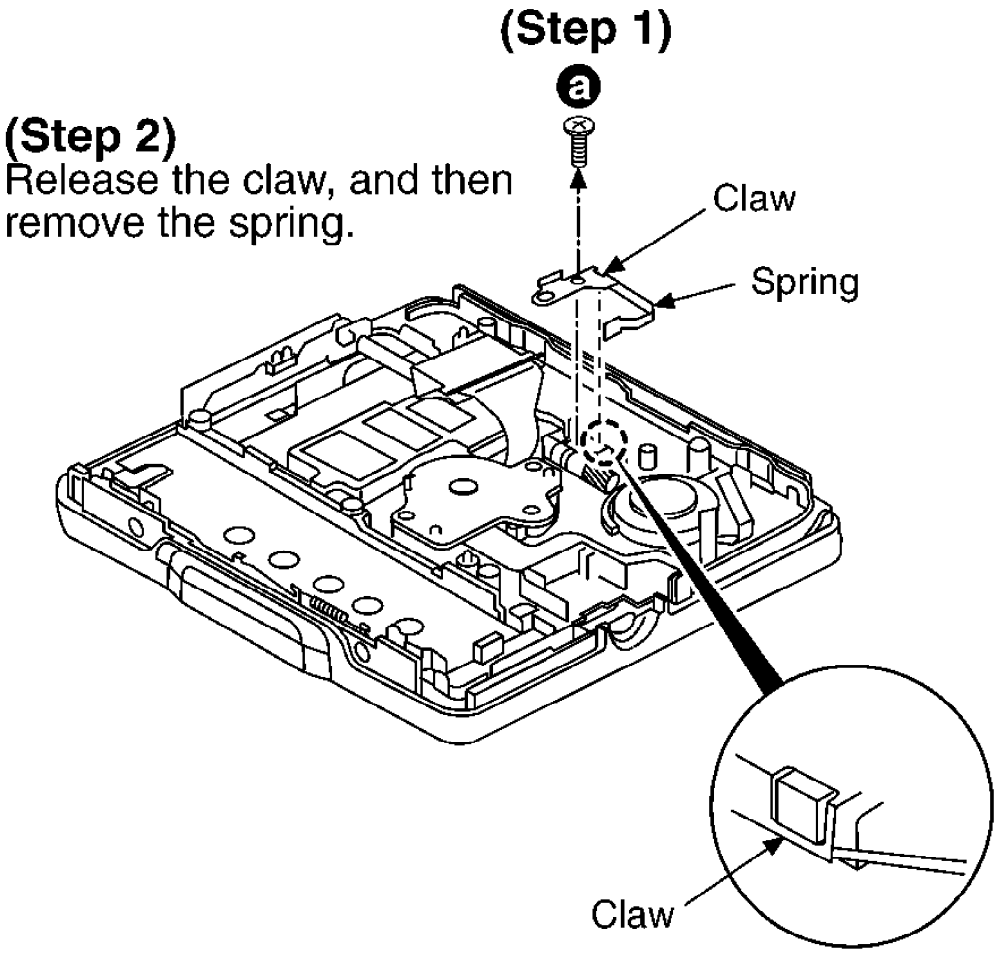

Downloaded from www.Manualslib.com manuals search engine

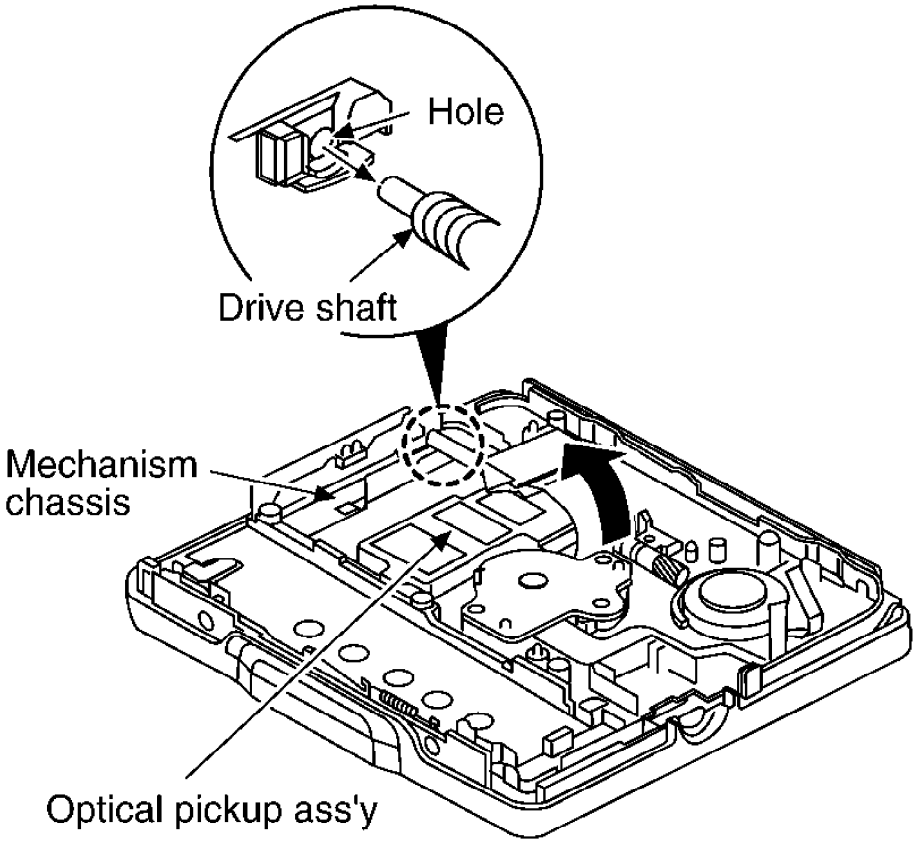

(Step 3)
Lift up the optical pickup, and then remove the drive shaft from the hole of mechanism chassis.

Downloaded from www.Manualslib.com manuals search engine

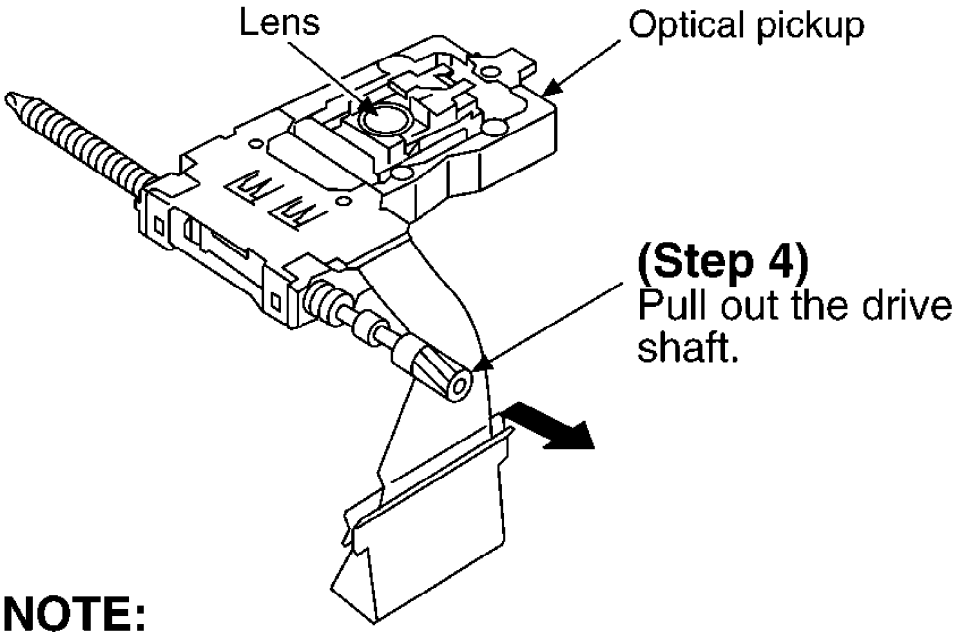

NOTE:

1. Use care to prevent damage the optical pickup, due to the precision construction.
2. Do not touch the lens of the optical pickup.

Downloaded from www.Manualslib.com manuals search engine

Installing the optical pickup

(Step 1)
Align the slot guide of optical pickup with the guide rail of sub shaft.

(Step 2)
Install the tip end of shaft to the hole of mechanism chassis.

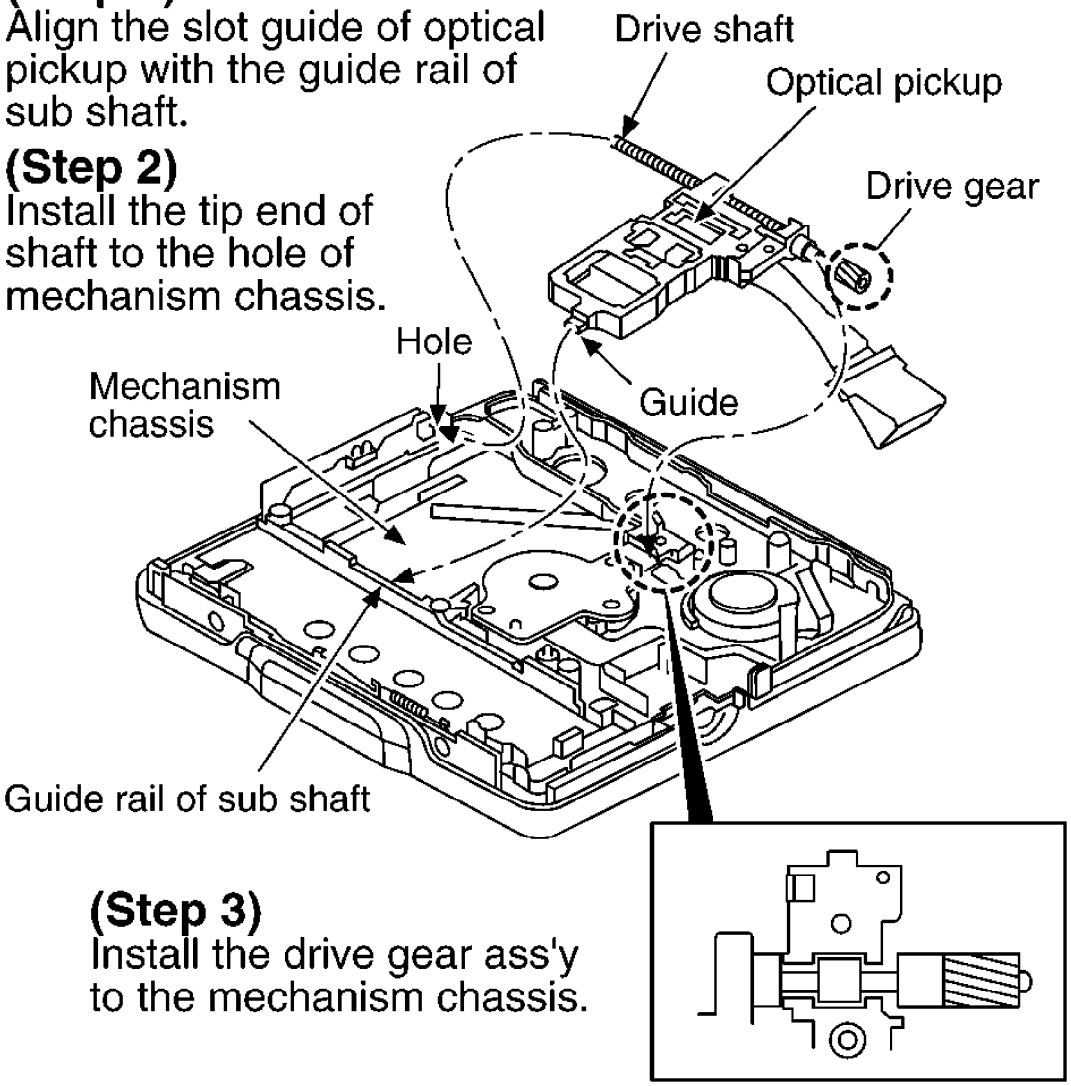

(Step 3)
Install the drive gear ass'y to the mechanism chassis.

Downloaded from www.Manualslib.com manuals search engine

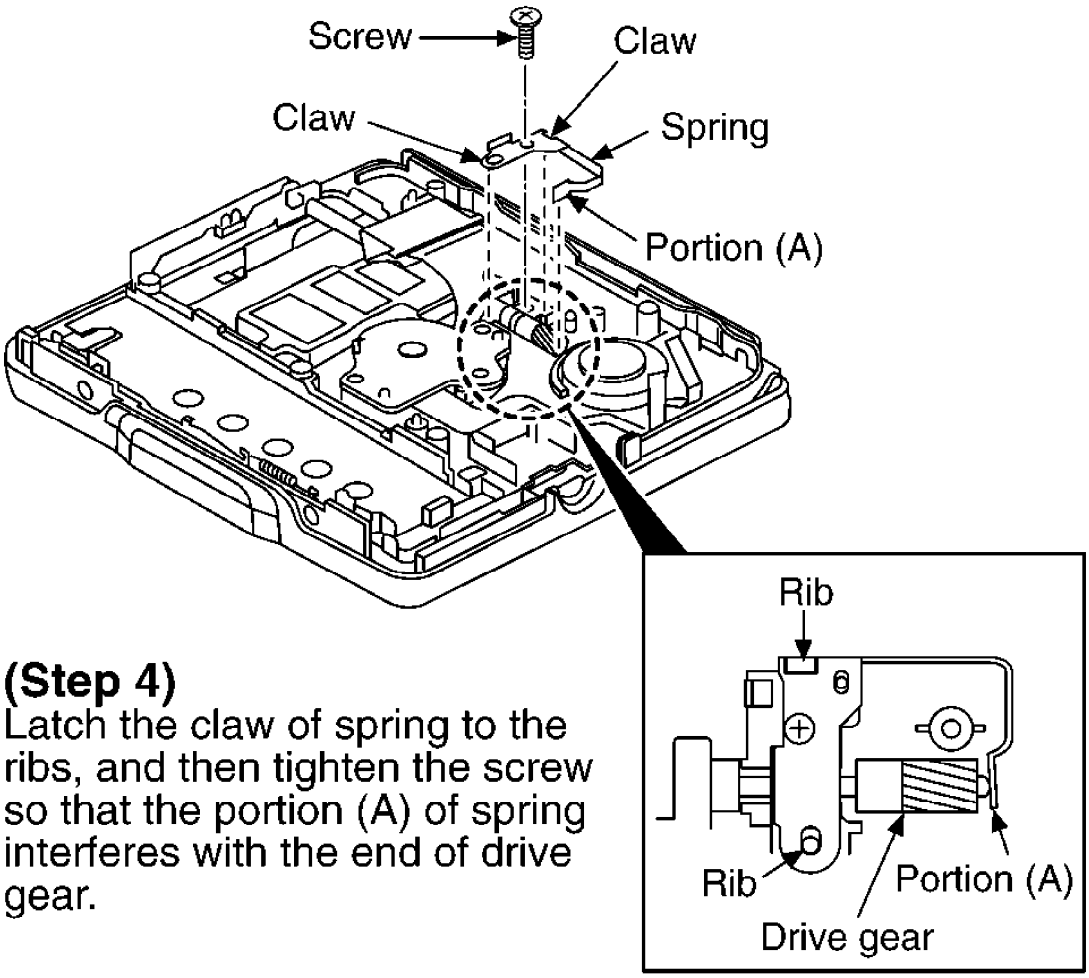

(Step 4)
Latch the claw of spring to the ribs, and then tighten the screw so that the portion (A) of spring interferes with the end of drive gear.

6. Measurements and Adjustments

Note:
After replacing the main components (optical pickup or traverse motor, etc.) of mechanism unit block, change to the adjust mode, and then perform the "Laser power adjustment", "Off-set automatic adjustment" and "Playback-onlydisc/ magneto-optical disc automatic adjustment".

6.1. Instruments to prepare

1. **Playback-only disc (Test disc RFKV0006)**
2. **Commercially available recordable disc (fully recorded with music) (magneto-optical disc)**

Downloaded from www.Manualslib.com manuals search engine

3. Laser power meter (LE8010 or compatible meter)

4. Remote controller

6.2. Laser power adjustment, Off-set automatic adjustment, Playback-only disc/magneto-optical disc automatic adjustment magnet

6.2.1. Enter the adjustment mode

Caution:

Place the unit on the insulation sheet with the disc cover side facing up.

1. **Disassemble the unit so that only the mechanism unit and the printed circuit board are exposed.**
   (Refer to (Step1) of the main part replacement procedure "5.2. Replacement for the intermediate cabinet").
2. **Move the optical pickup to the innermost side and attach the disc cover.**
3. **Set the battery and connect the remote controller.**
4. **Turn off the power, and switch main unit's HOLD switch off.**
5. **Press the VOL+, VOL-, ▶▶| , and |◀◀ keys on the remote controller within two seconds. (as shown in Fig. 5)**

Fig. 5

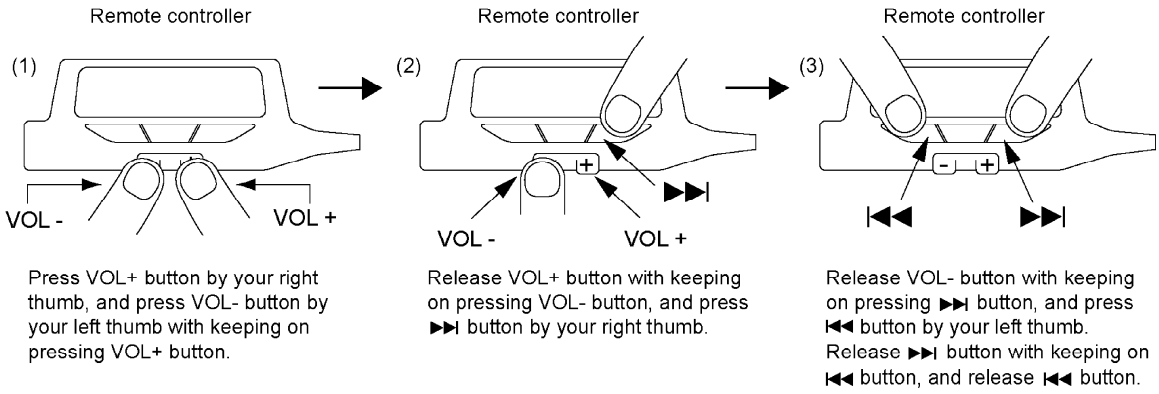

6. **When the adjustment mode is activated, "T0E " will be displayed on the LCD of remote controller. After "T0E " is displayed, select the desired adjustment item with the ▶▶| button or |◀◀ button of the remote controller. (If it is not displayed, perform the procedures written above again.)**

Downloaded from www.Manualslib.com manuals search engine

Adjustment mode	Display
Laser power adjustment	T0E
Off-set automatic adjustment	T1E
Magneto-optical disc automatic adjustment	T2E
Playback-only disc automatic adjustment	T3E
Jitter meajurement (74minutes)	T4E
Jitter meajurement (60 minutes)	T5E
Destination change	T6E
Off-set automatic adjustment value check	T7E
Magneto-optical disc automatic adjustment value check	T8E
Playback-only disc automatic adjustment value check	T9E
Error rate measurement (double velocity)	TAE
ROM collection	TBE
DRAM check	TCE
Aging	TDE
Tilt measurement	TEE
PWB inspection	TFE

***In the display of T0E ~ TFE shown above, you must adjust T0E , T1E , T2E and T3E . You must perform the adjustment by observing the order T0E → T1E → T2E → T3E .**

6.2.2. Laser Power Adjustment

Adjust each laser power: read power for reading (play).

6.2.2.1. Set the Unit to the Adjustment Mode

Cautions

About handling the optical pickup and the magnetic head.

- **The optical pickup is structured precisely; therefore, it is very fragile. Be careful not to touch it with the edge of the laser power meter. Do not touch the lens.**
- **The sensor of the laser power meter is a very fine part. Be careful not to touch it to the optical pickup lens.**
- **The focus point of the laser reaches to 356°F. Therefore, avoid adjusting using laser power for a long time because the sensor of the laser power meter may be burned.**
- **Do not set the unit to the laser power adjustment mode with the MD loaded. Doing so may result in damage to the MD.**

Downloaded from www.Manualslib.com manuals search engine

- **Laser diode in the optical pickup may be destroyed by the static electricity generated in your clothes or body. Be especially careful with the static electricity.**

6.2.2.2. Adjustment Procedure

1. Uncover the laser power meter. (as shown in Fig. 6)

Fig. 6

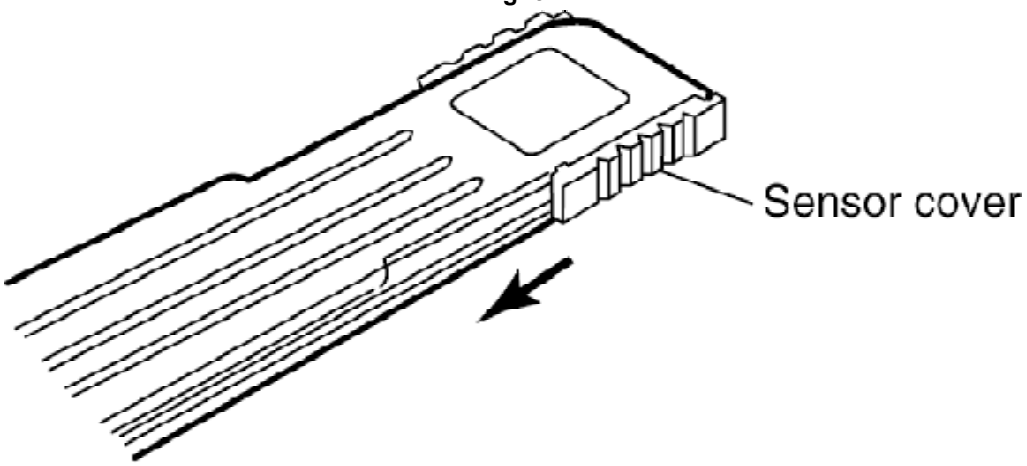

2. Locate the sensor of the laser power meter at a position above the optical pickup (horizontally at a level of the disc position). (as shown in Fig. 7)

Fig. 7

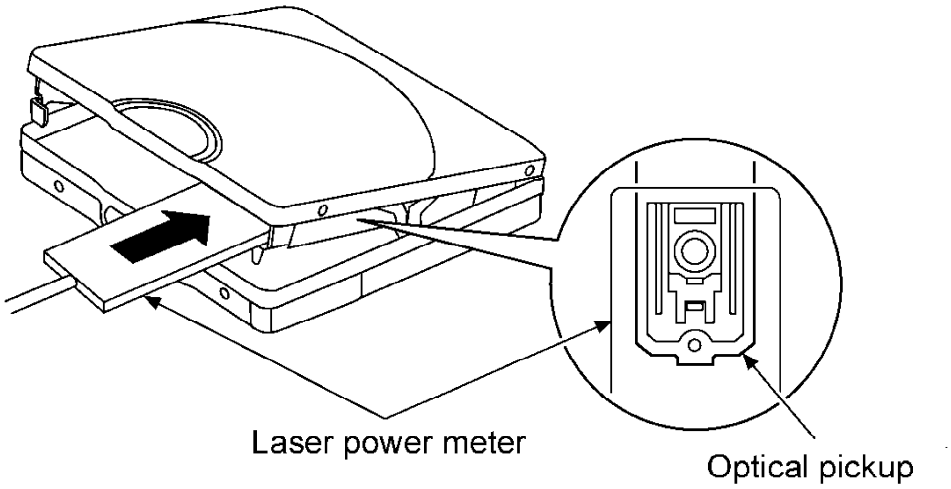

3. Press the ▶/■ key of the remote controller ("T0E " changes to "LD " of the LCD).

Downloaded from www.Manualslib.com manuals search engine

4. Press the ▶▶| key of the remote controller ("LD " changes to "LP " of the LCD).
5. Set the laser power at 600 μ W±10% by using VOL+ and VOL- key of the remote controller.
   [Specified range: 600 μ W±10%]
   Caution:
   Proceeding on to the subsequent adjustment procedure with the read power exceeding 600 μ W±10% will result in damage to the optical pickup.
6. Set the laser power with the ▶▶| key of the remote controller ("LP " changes to "LDOK " in the LCD).
7. Press the ▶/■ key of the remote controller ("LDOK " changes to "T0E " on the LDC.
8. Remove the laser power meter. Laser power adjustment is finished.

[REFERENCE]
<For use of MD cartridge type laser power meter>
We recommend you to use a sensor type laser power meter for laser power adjustment of this set.
But if available is a MD cartridge type only, follow the procedure below.

1. Disassemble the unit so that only the mechanism unit and the printed circuit board are exposed. (as shown in Fig. 8)
2. Set the laser power meter cartridge. (as shown in Fig. 8)
3. Set the battery and attach and secure the battery cover with a rubber band. (as shown in Fig. 9)
4. Follow the steps for "6.2.1. Enter the adjustment mode". (Subsequent procedures are the same as those for the sensor type.)

Fig. 8

Downloaded from www.Manualslib.com manuals search engine

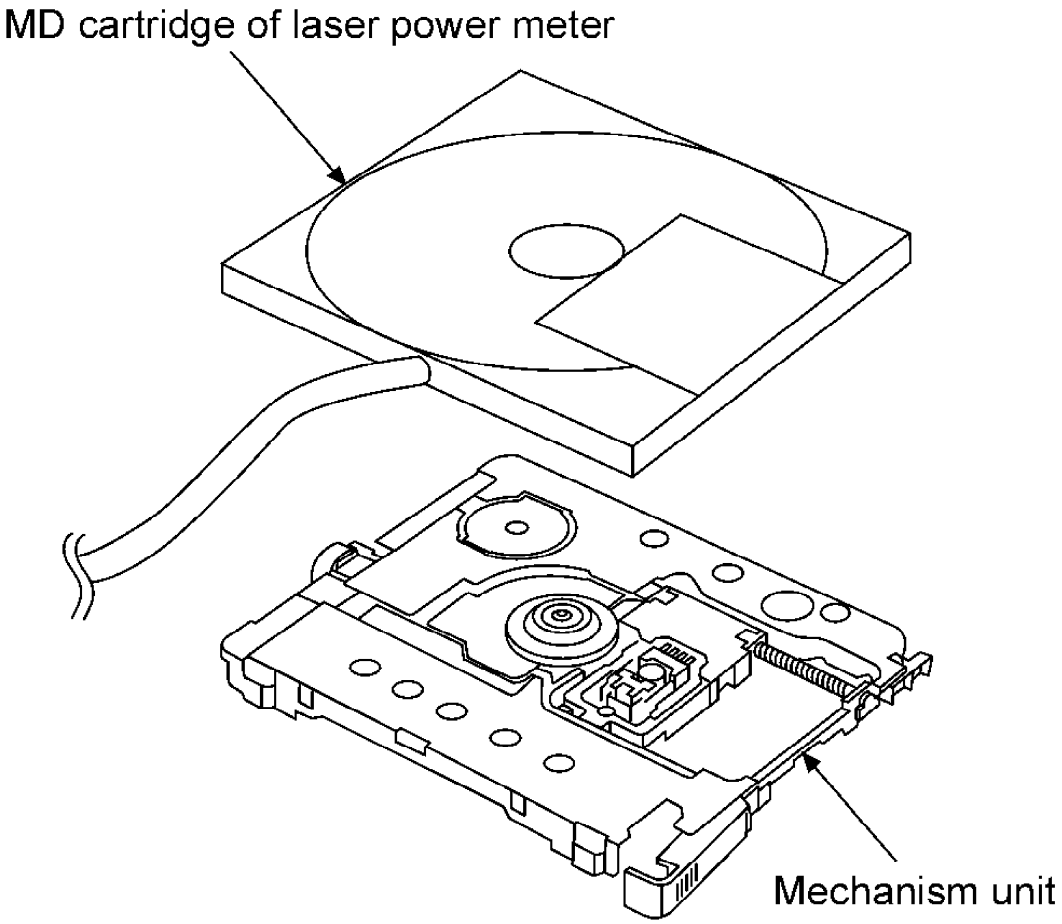

Fig. 9

Downloaded from www.Manualslib.com manuals search engine

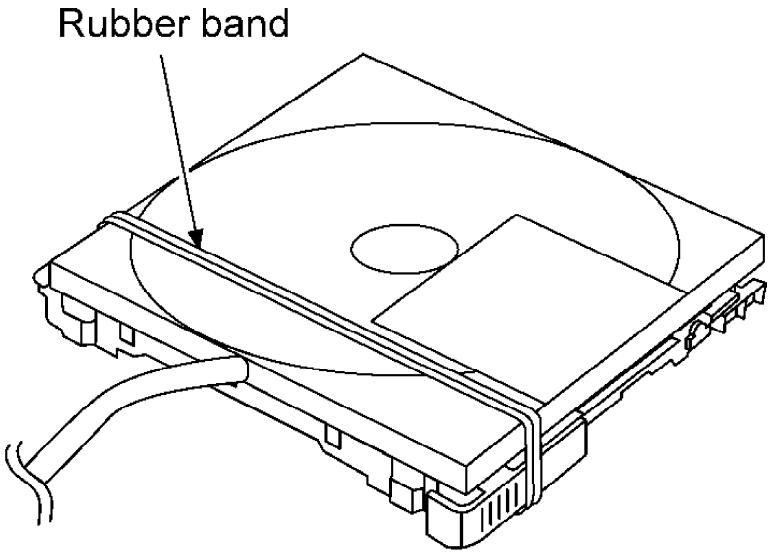

6.2.3. Off-set automatic adjustment

1. Remove the mechanism unit from the disc cover. Then move the optical pickup to the center, and attach the mechanism unit again to the disc cover.
2. With “T1E ” displayed, leave the disc cover open.
3. Pressing the ▶/■ key on the remote controller will start adjustment.
4. During adjustment, “FADJ ” is displayed on the LCD of the remote controller. If there is no abnormality, “FADJOK ” will be displayed.
5. Pressing the ▶/■ key while “FADJOK ” is displayed will return to the “T1E ” display mode.

6.2.4. Magneto-optical disc automatically adjustment

1. Have “T2E ” indicated on display, and set the full-recorded magneto-optical disc. (Check to make sure the disc is properly seated.)
2. Press ▶/■ key of the remote controller. The adjustment is started.
3. During adjustment, “AADJ ” is displayed on the LCD of the remote controller. If there is no abnormality, “AOK ” will be displayed.

Note:
If it is displayed “ANG ”, check “7. Troubleshooting Guide” in the order.

Downloaded from www.Manualslib.com manuals search engine

4. Press ▶/■ key (“AOK ” or “ANG ” changes to “T2E ”).

5. After the adjustment is finished, remove the disc.

6.2.5. Playback-only disc automatic adjustment

1. Have “T3E ” indicated on display, set the playback-only disc.
   (Check to make sure the disc is properly seated.)
2. Press ▶/■ key of the remote controller. The adjustment is started.
3. During adjustment. “AADJ ” is displayed on the LCD of the remote controller.
   If there is no abnormality, “AOK ” will be displayed.

Note:
If it is displayed “ONG ”, check “7. Troubleshooting Guide” in the order.

4. Press ▶/■ key (“OOK ” or “ONG ” changes to “T3E ”).

5. After the adjustment is finished, remove the disc.

6.2.6. How to get out the adjustment mode

Remove the battery when you finish the adjustment.

6.3. Checking the main unit's keys

1. Set the battery and connect the remote controller.
2. Turn off the power, and switch main unit’s HOLD switch OFF.
3. Press the VOL+, VOL-, ▶▶|, and |◀◀ keys on the remote controller within two seconds. (as shown in Fig. 5)
4. When the unit enters the unit key check mode, the display shows “T KEX ”.
   While “T KEX ” is displayed, press the ▶/■, ▶▶|, |◀◀ and VOL(+, -) keys of the unit in the specified order and then switch off the HOLD switch.
   *When thefirst ▶/■ key is pressed, the display will change to “T ■ ■ ■ ”.

Downloaded from www.Manualslib.com manuals search engine

Main unit's keys	LCD display position and letters
▶/■	After the third key is pressed, the second digit displayed will change from " ■ " to "O ".
▶▶|	
|◀◀	
VOL+	After the second key is pressed, the third digit displayed will change from " ■ " to "O ".
VOL-	
HOLD OFF	The first digit displayed will change from " ■ " to "O ".

5. After all keys have been pressed and there is no abnormality, "T OOO " will be displayed.

6. Perform below voltage check about the keys come under if it is not displayed "T OOO ".

Main unit's keys	Check points	ON	OFF
HOLD	TP428	0V	2.2V
▶/■	IC201 48pin	0V	2.2V
▶▶|	TP421	1.13V	2.2V
|◀◀	TP421	1.69V	2.2V
VOL+	TP421	0V	2.2V
VOL-	TP421	0.58V	2.2V

Note:
Refer to "10. Printed Circuit Board Diagram" for the test points.

7. Remove the battery when you exit from this mode.

7. Troubleshooting Guide

Downloaded from www.Manualslib.com manuals search engine

Overall flowchart

1. Confirmation of the Main unit and the remote controller.

Note: We mentioned "*Filter" beside the waveform about the points for necessary the filter when you check the waveforms. Check it with setting the band width of the meter about 5~10kHz or connecting the filter shown below.

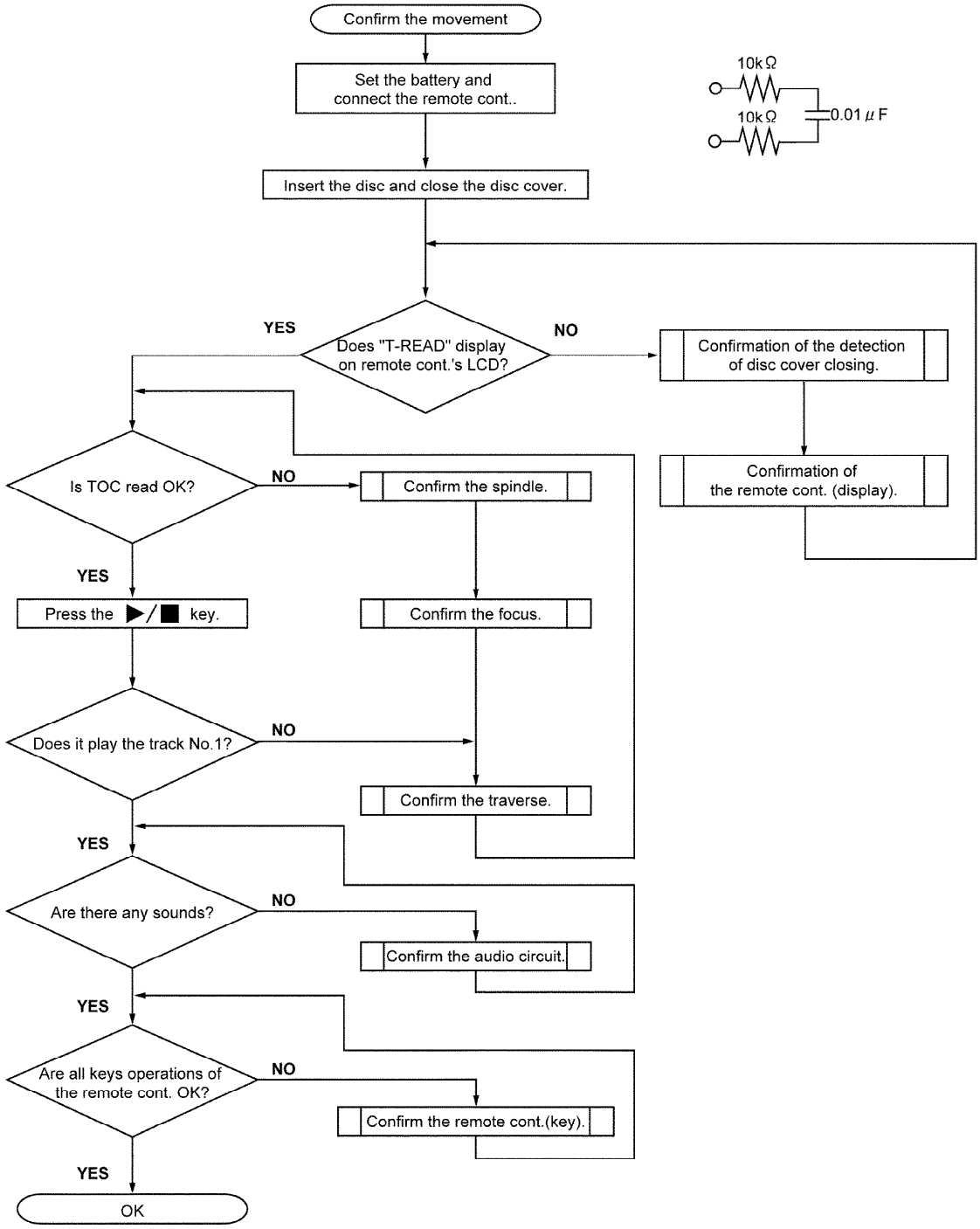

Downloaded from www.Manualslib.com manuals search engine

2. Confirmation of the main unit and the charging stand
(Confirmation of the charging circuit.)

Note: DC power supply to be prepared.

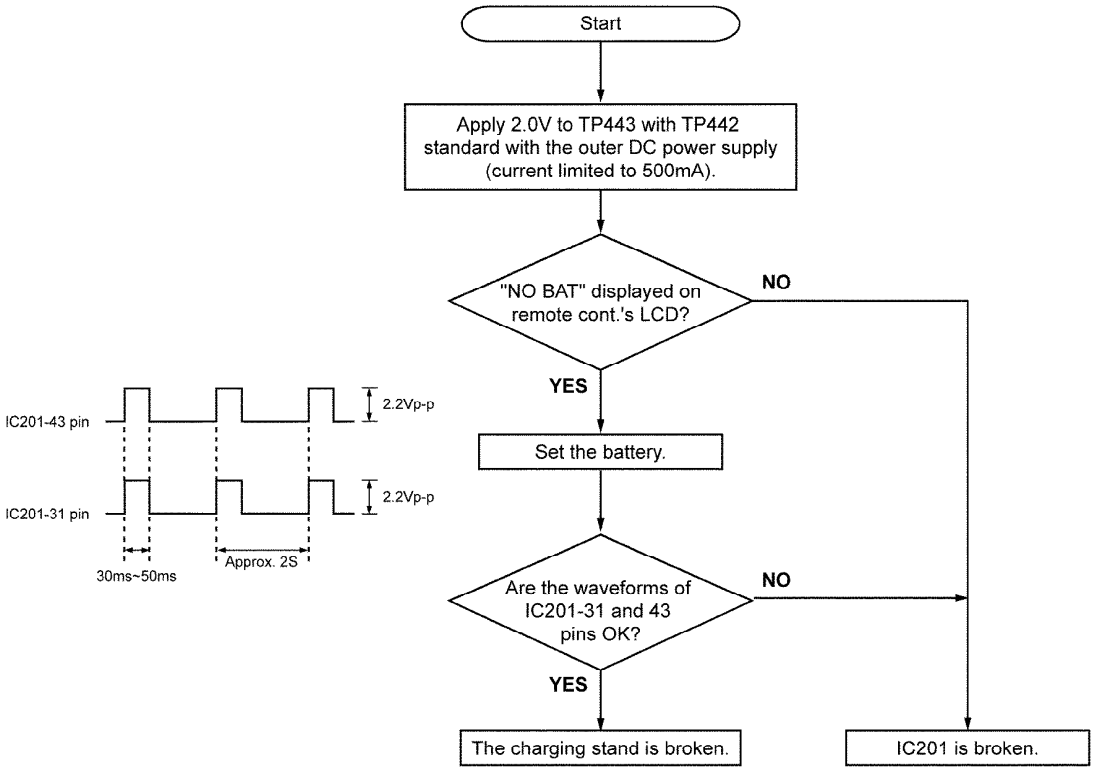

Confirmation of the detection of the disc cover closing.

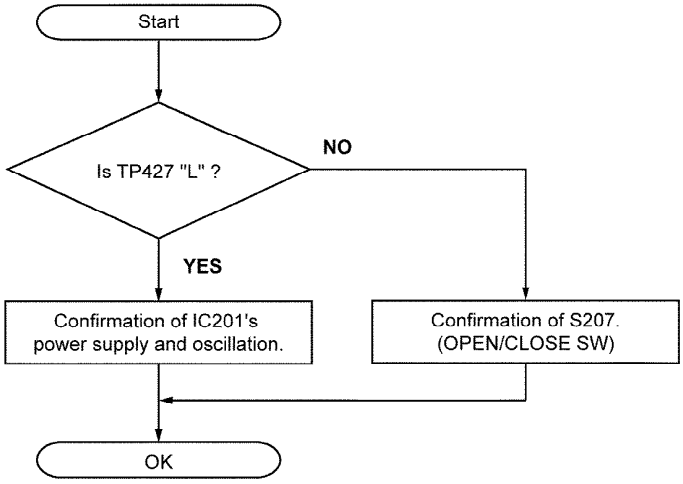

Downloaded from www.Manualslib.com manuals search engine

Confirmation of the remote controller(key)

Confirm the waveform at TP437 and the voltage when the keys are pressed.

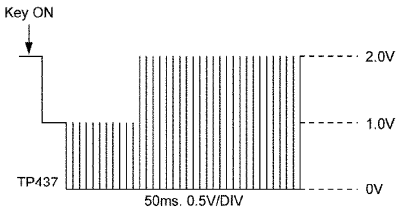

MAIN	VOLTAGE(V)	BOUNDARY VOLTAGE(V)
PLAY	0.150	
		0.172
VOL +	0.344	
		0.499
VOL −	0.653	
		0.759
EQ MODE	0.865	
		0.955
PLAY MODE	1.046	
		1.136
F-SKIP	1.226	
		1.326
DISPLAY	1.425	
		1.515
R-SKIP	1.606	
		1.702
(KEY-OFF)	1.799	
		1.900
HOLD	2.000	
		2.100
WITHOUT REMOTE CONT.	2.200	

Confirmation of spindle

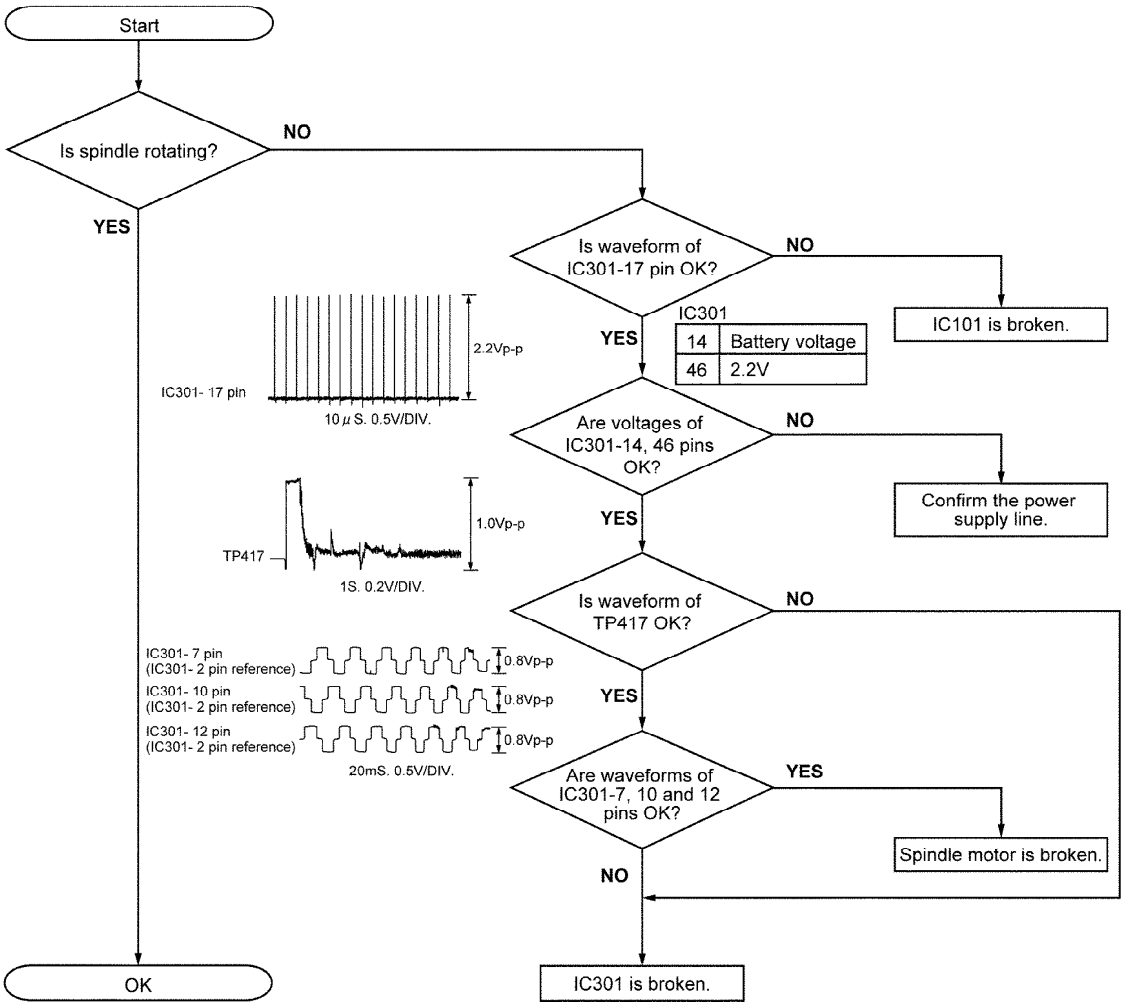

Downloaded from www.Manualslib.com manuals search engine

Confirmation of the focus

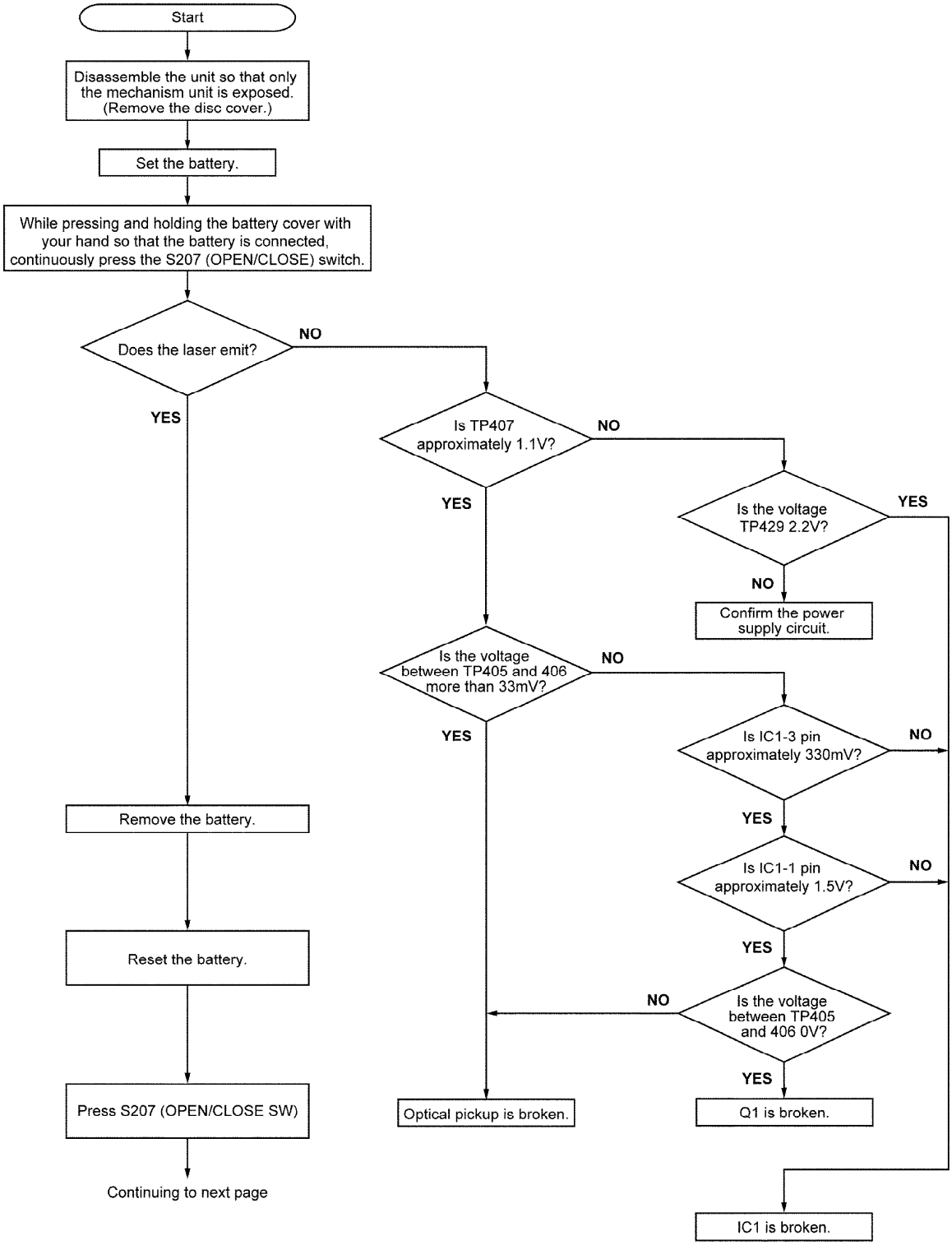

Downloaded from www.Manualslib.com manuals search engine

(*1) When checking the RF waveform, set to the adjustment mode and adjust it to the jitter measurement condition. Continuous waveform can be checked. (Refer to "7.2.1. Enter the adjustment mode")

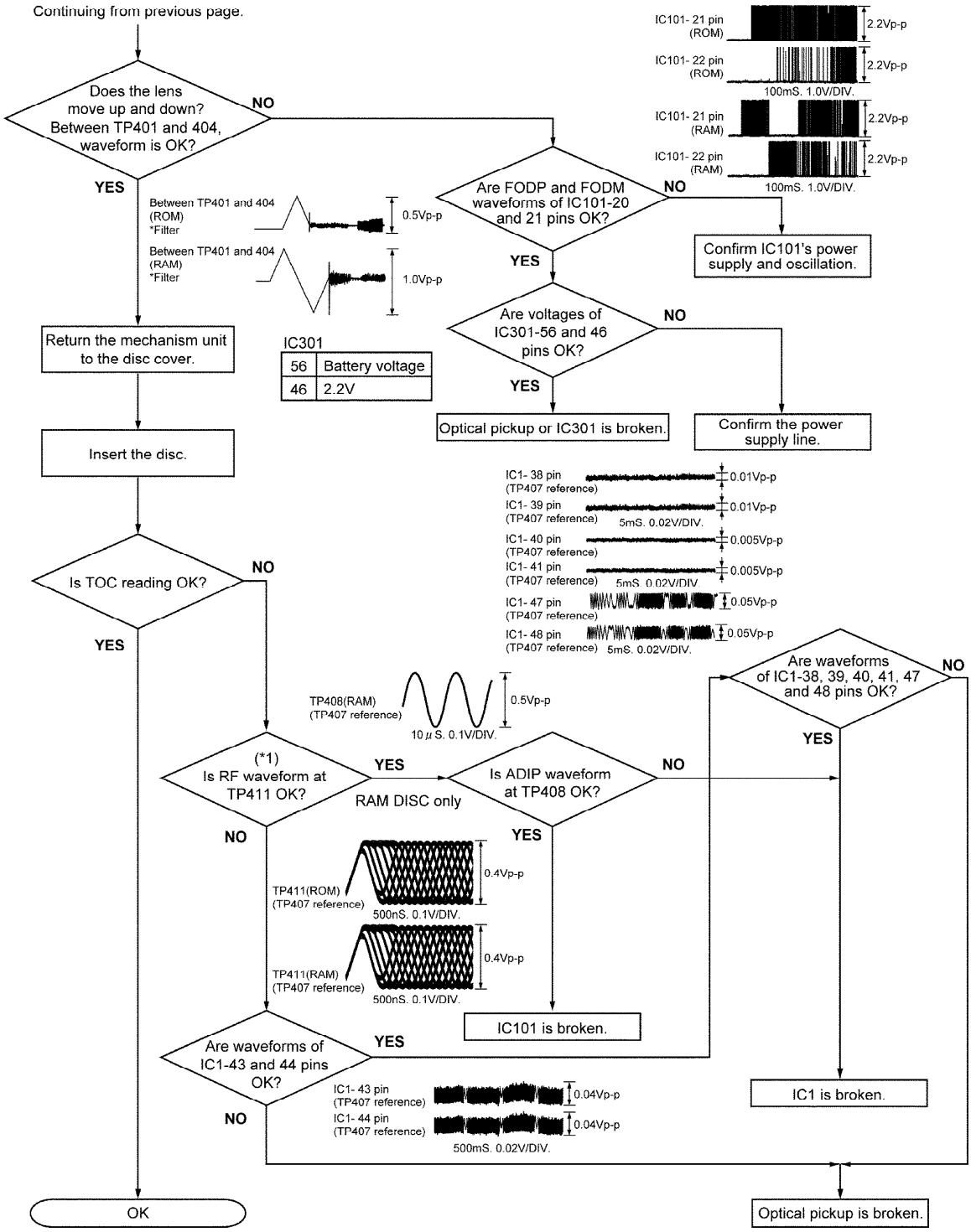

Downloaded from www.Manualslib.com manuals search engine

Confirmation of the traverse

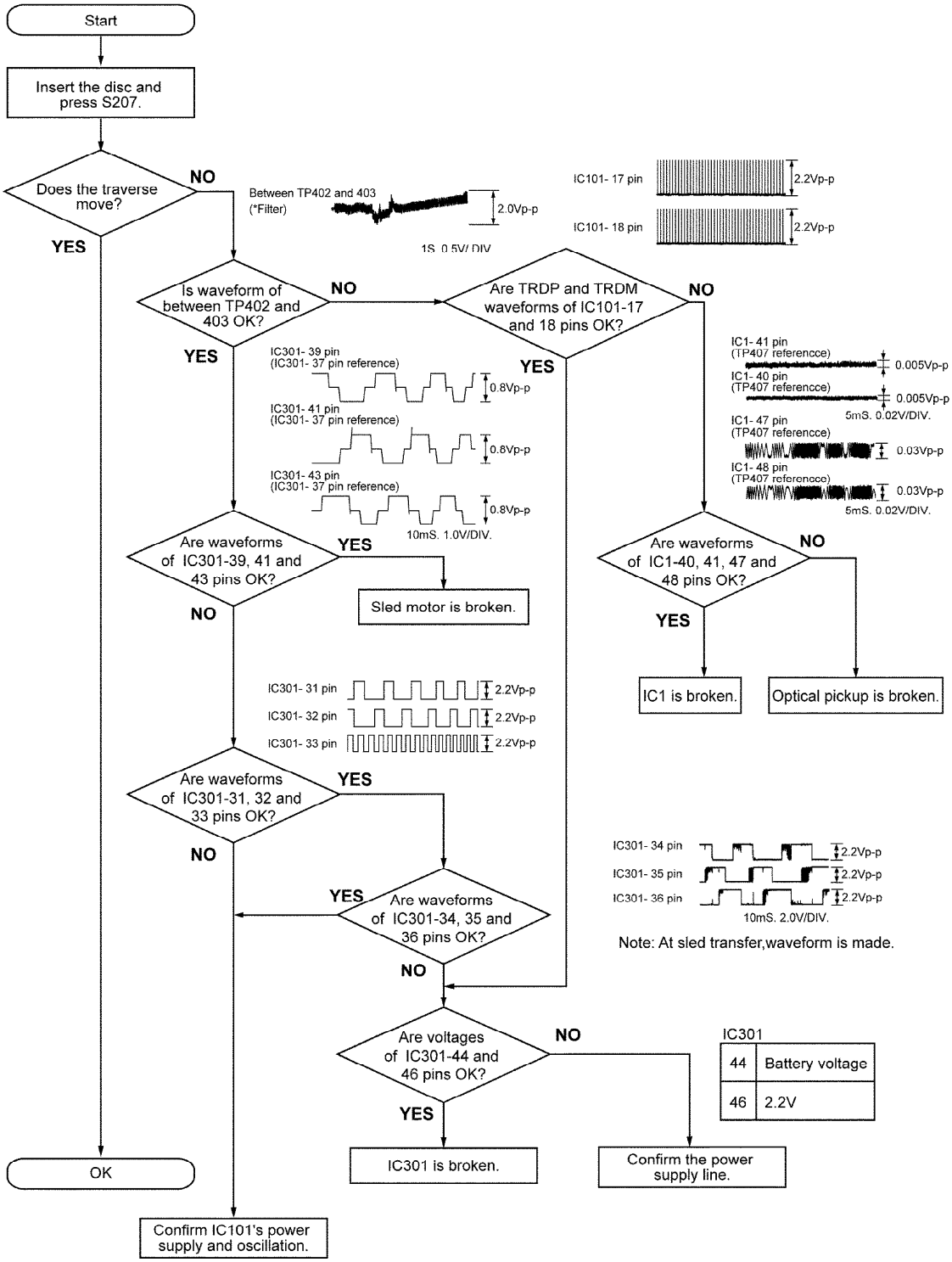

Downloaded from www.Manualslib.com manuals search engine

Confirmation of the power supply circuit

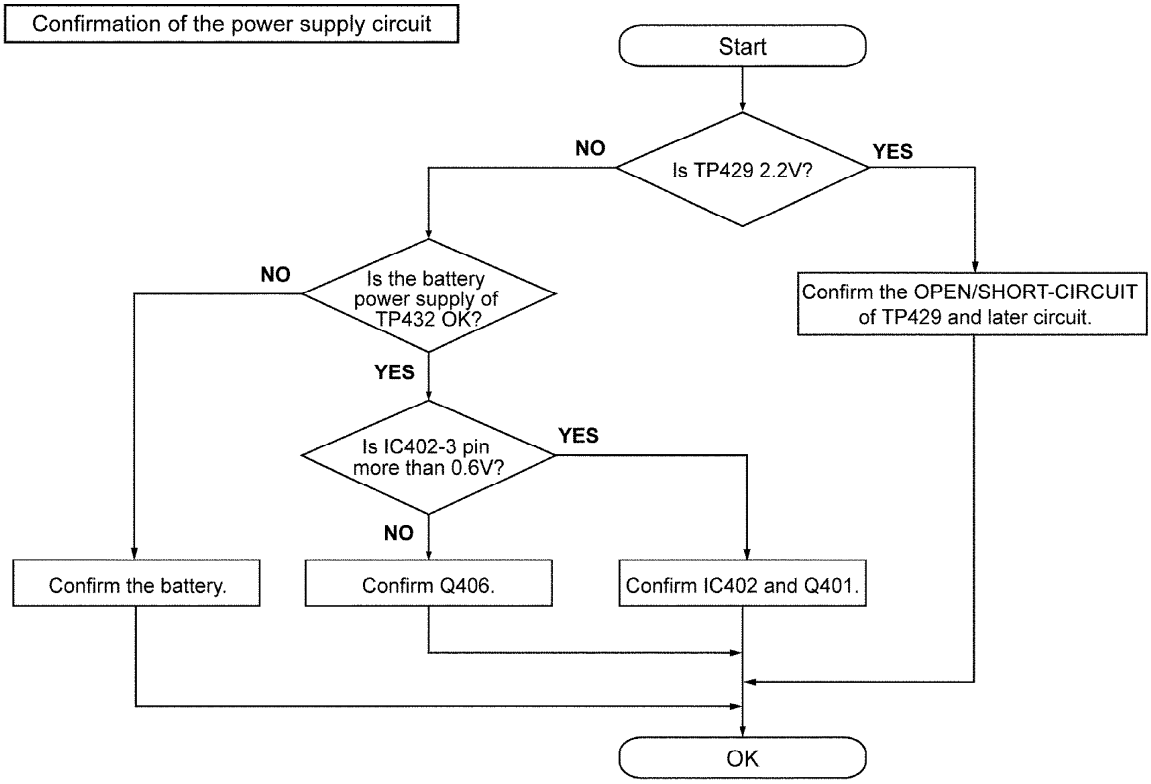

Confirmation of the audio circuit

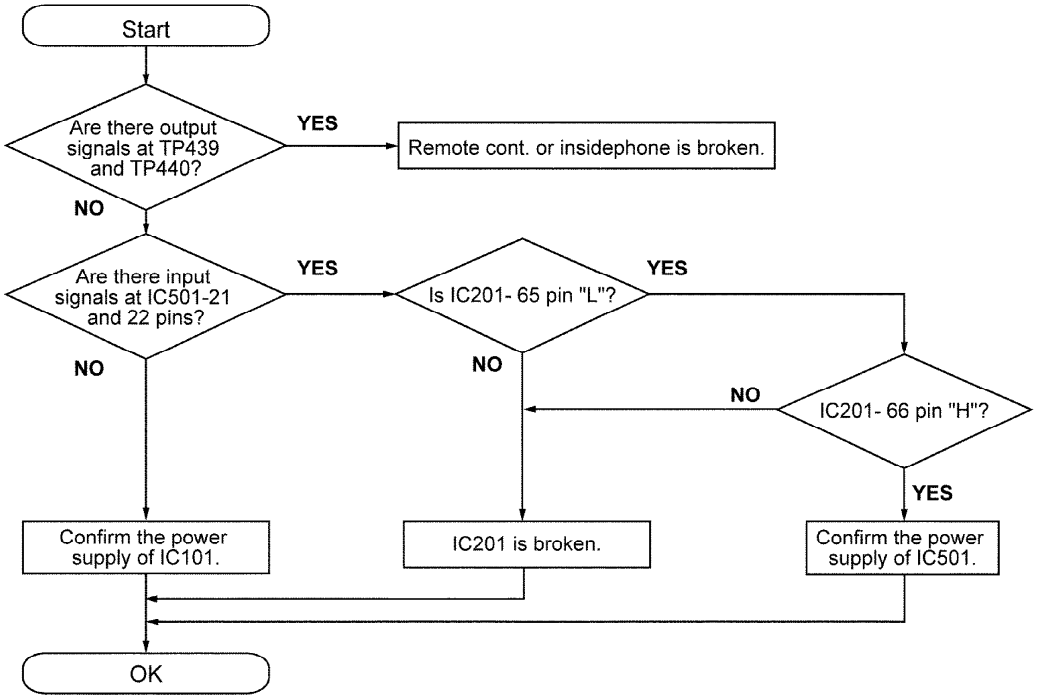

Downloaded from www.Manualslib.com manuals search engine

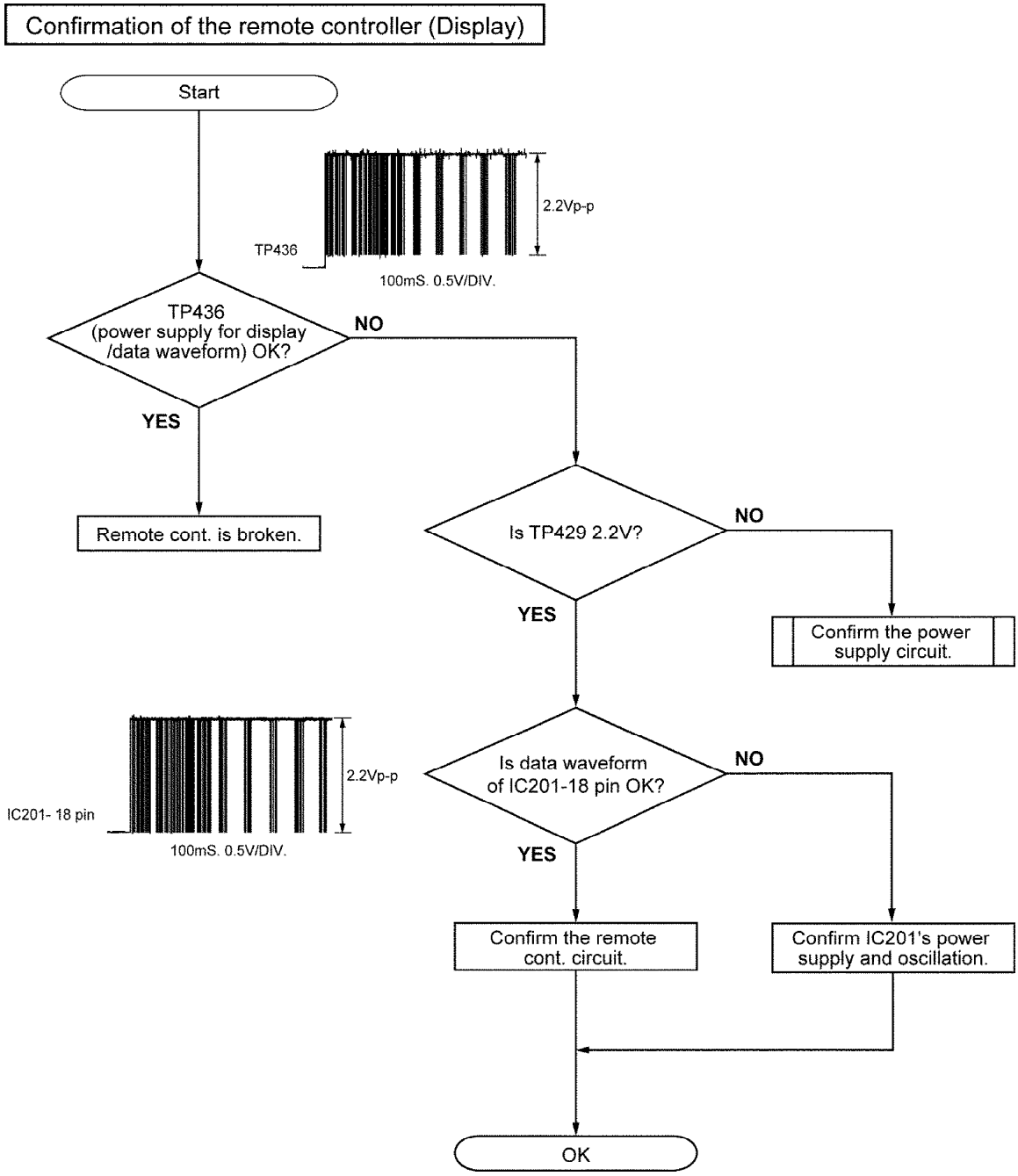

8. Schematic Diagram Notes

8.1. Type Illustration of IC's, Transistors and Diodes

Downloaded from www.Manualslib.com manuals search engine

8.2. Schematic Diagram Notes

This schematic diagram may be modified at any time with the development of new technology.

Notes:

- ● S201 : Volume control switch (+)
- ● S202 : volume control switch (-)
- ● S203 : Skip/search switch (▶▶|)
- ● S204 : Skip/search switch (|◀◀)
- ● S206 : Play/stop switch (▶/■)
- ● S207 : Cover open/close det. switch
- ● S208 : Hold switch in "OFF" position. (HOLD)

- **Indicated voltage values are the standard values for the unit measured by the DC electronic circuit tester (high-impedance) with the chassis taken as standard. Therefore, there may exist some errors in the voltage values, depending on theinternal impedance of the DC circuit tester.**

No mark: MD STOP
( ): MD play [1kHz, L+R, 0dB]

Important safety notice:
Components identified by ⚠ mark have special characteristics important for safety.
Furthermore, special parts which have purpose of fire-retardant (resistors), high-quality sound (capacitors), low-noise (resistors), etc. are used. When replacing any of components, be sure to use only manufacture's specified parts shown in theparts list.

Caution!

IC and LSI are sensitive to static electricity.
Secondary trouble can be prevented by taking care during repair.
Cover the parts boxes made of plastics with aluminum foil.
Ground the soldering iron.
Put a conductive mat on the work table.
Do not touch the legs of IC or LSI with the fingers directly.

Downloaded from www.Manualslib.com manuals search engine

Voltage and signal line
: Positive voltage line
: Playback signal line

9. Schematic Diagram

10. Printed Circuit Board Diagram

11. Block Diagram

12. Terminal Function of IC's

12.1. IC1 (AN86772FHKEBV): RF AMP

Downloaded from www.Manualslib.com manuals search engine

Pin No.	Mark	I/O Division	Function
1	LDO	O	LD amp. output terminal
2	LDIN	I	LD amp. reverse input terminal
3	APCPD	I	Photo diode light quantity det. input terminal
4	NC	—	Not used, open
5	ARFO	O	RF amp. output terminal
6	NC	—	Not used, open
7	EQIN	I	EQ input terminal
8	CRFAGC	I	RFAGC capacitor connection terminal (Connected to power supply through capacitor)
9	OUTRF	O	EFM output terminal
10	NC	—	Not used, open
11	PEAK	O	EFM bright-side detection output terminal
12	GND	—	GND terminal
13	BOTM	O	EFM dark-side detection output terminal
14	CEA	I	3T envelope det. capacitor connection terminal (Connected to power supply through capacitor)
15	MON3T	O	3T envelope output terminal
16	CC	O	C signal's dark-side detection/amplified output terminal
17	DD	O	D signal's dark-side detection/amplified output terminal
18	VCC	I	Power supply terminal
19	BB	O	B signal IV conversion output terminal
20	AA	O	A signal IV conversion output terminal
21	FE2	O	F2 signal IV conversion output terminal
22	FE1	O	F signal IV conversion output terminal
23	NC	—	Not used, open
24			

Downloaded from www.Manualslib.com manuals search engine

24			

Pin No.	Mark	I/O Division	Function
25	ADIP	O	ADIP signal output terminal
26	NC	—	Not used, open
27			
28	RFSWHL	I	Reflectance H/L switching signal input terminal
29	RFSWPG	I	Pit/Crv switching signal input terminal
30	GND2	—	GND terminal
31	NC	—	Not used, open
32	MONI OFF	I	3T MON circuit control signal input terminal
33	BPF	I	ADIP BPF switching signal input terminal
34	LD ON	I	APC circuit control signal input terminal
35	NRFSTBY	I	Standby control signal input terminal
36	NC	—	Not used, open
37			
38	F1	I	F1 signal input terminal
39	F2	I	F2 signal input terminal
40	A	I	A signal input terminal
41	B	I	B signal input terminal
42	VREF	O	Reference signal output terminal
43	RF2	I	RF2 signal input terminal
44	RF1	I	RF1 signal input terminal
45	CENVD	—	D signal detection capacitor connection terminal (Not used, open)
46	CENVC	—	C signal detection capacitor connection terminal (Not used, open)
47	D	I	D signal input terminal
48	C	I	C signal input terminal

12.2. IC101 (MN66620RF): ATRAC ENCORDER/DECORDER, SERVO SIGNAL PROCESSOR

Downloaded from www.Manualslib.com manuals search engine

Pin No.	Mark	I/O Division	Function
1	RVDD 3	I	Power supply to internal DRAM
2	RVDD 18	O	Voltage regulator output terminal (Connects to internal DRAM supply terminal)
3	RVDD 23	—	Voltage regulator input terminal (Accepts a supply voltage identical to that for IO pad)
4	LON	I	Voltage regulator ON/OFF control signal input terminal (1:ON, 2:OFF)
5	TMDISY	O	Microprocessor interrupt signal 3 output terminal (for monitoring)
6	TSGSY NC	O	ATRAC frame sync. signal output terminal (for monitoring)
7	MONI6	O	Monitor signal output terminal 6
8	MONI5	O	Monitor signal output terminal 5
9	NRST	I	Chip Reset signal input terminal (O:reset)
10	SELAD	I	Microprocessor IF address data select signal input terminal
11	SSCK	I	Microprocessor IF shift clock signal input terminal
12	SSDW	I	Microprocessor IF write data input terminal
13	SSDR	O	Microprocessor IF read data output terminal
14	NRQ	O	Microprocessor interrupt signal 1 output terminal
15	MDAS CSY	O	Microprocessor interrupt signal 2 output terminal
16	FG	I	FG input terminal
17	TRDP	O	Tracking drive (+) PWM signal output terminal
18	TRDM	O	Tracking drive (-) PWM signal output terminal

Downloaded from www.Manualslib.com manuals search engine

Pin No.	Mark	I/O Division	Function
19	RVDD 1	I	Power supply to internal DRAM
20	RVSS 2	—	GND to internal DRAM
21	FODP	O	Focus drive (+) PWM signal output terminal
22	FODM	O	Focus drive (-) PWM signal output terminal
23	SPDP	O	Spindle drive (+) PWM signal output terminal
24	SPDM	O	Spindle drive (-) PWM signal output terminal
25	LDON	O	Laser power control output terminal (1:ON, 0:OFF)
26	PVPP DRAM1	—	Monitor to internal DRAM output terminal (Not used, open)
27	IVDD 0	—	Power supply terminal for I/O pad
28	DVDD 0	—	Digital power supply
29	XI	I	Crystal oscillator input terminal (F=16.9344MHz)
30	DVSS 0	—	Digital GND
31	XO	O	Crystal oscillator output terminal (F=16.9344MHz)
32~34	STP10~STP12	I	Stepping motor status input terminal (0~2)
35~37	STP00~STP02	O	Stepping motor drive signal output terminal (0~2)
38	RFSWHL	O	Laser power control output terminal (PIT/GRUVE switching)
39	RFSWPG	O	Laser power control output terminal (Reflectance switching)
40	PEFMS	I	EFM signal input terminal
41	EFMPLLF	O	EFM PLL filter output terminal
42	PEFM1	O	Loop filter terminal for EFM data slicing (Not used, open)
43	EFMFIL	O	Input filter switching for EFM data slicing terminal
44	EFMIREF	I	Reference current setting terminal for EFM PLL

Downloaded from www.Manualslib.com manuals search engine

Pin No.	Mark	I/O Division	Function
45	ADIP	I	ADIP signal input terminal
46	PEAK	I	Servo ADC input terminal
47	BTOM		
48	BAT		
49	GAIRAN		
50	MON3T		
51	VREFI	I	Servo ADC input/voltage reference for ADIP comparator
52	FF2	I	Servo ADC input terminal
53	AVDD 0	—	Analog power supply
54	FF1	I	Servo ADC input terminal
55	AVSS 0	—	Analog GND
56	DD	I	Servo ADC input terminal
57	CC		
58	BB		
59	AA		
60	AVDD 1	—	Analog power supply
61	AVSS 1	—	Analog GND
62	AVSS 2		
63	ADACL	O	Audio output terminal (L-ch.)
64	ADACR	O	Audio output terminal (R-ch.)
65	AVDD 3	—	Analog power supply (dedicated to audio DAC)
66	DVDD 1	—	Digital power supply
67	DVSS 1	—	Digital GND
68	SEL0	I	Connected to GND
69	RVDD 2	I	Power supply to internal DRAM
70	RVSS 3	—	GND to internal DRAM
71	SEL1	I	Connected to GND
72, 73	TS1, TS2		
74~78	MONI4 ~MONI0	O	Monitor signal output terminal (4~0)
79	TS3	I	Connected to GND
80	TSCTSY	O	Microprocessor interrupt signal 4 output terminal (for Monitor)

Downloaded from www.Manualslib.com manuals search engine

12.3. IC201 (MN101C32GAE): SYSTEM CONTROL

Pin No.	Mark	I/O Division	Function
1	VREF-	—	AD reference input (-) (connected to GND)
2	(AN0) REM KEY	I	Remote cont. key input terminal
3	(AN1) KEY IN	I	Unit key input terminal
4	(AN2) BATT	I	Battery voltage det. input terminal
5	(AN3)	—	Not used, connected to GND
6	(AN4)		
7	(AN5)		
8	(AN6)		
9	(AN7)	—	Not used, connected to power supply terminal
10	VREF+	—	AD reference input (+) (connected to power supply)
11	VDD	—	Power supply terminal
12	OSC2	O	System clock output terminal (F=6MHz)
13	OSC1	I	System clock input terminal (F=6MHz)
14	VSS	—	GND terminal
15	XI	—	Sub clock input terminal (Not used, connected to GND)
16	XO	—	Sub clock output terminal (Not used, open)
17	MMOD	—	Memory mode switching input terminal (Not used, connected to GND)
18	REM DATA	O	LCD driver data output terminal
19	LINK RXD	I	Link serial communication RXD input terminal
20	—	—	Not used, open
21	SSDW	O	Write data output terminal for CPU interface

Downloaded from www.Manualslib.com manuals search engine

Pin No.	Mark	I/O Division	Function
22	SSDR	I	Read data input terminal for CPU interface
23	SSCLK	O	Clock output terminal for CPU interface
24	BUZZER	O	Confirmation tone output terminal
25	RST	I	Reset signal input terminal
26	CFSYNC	I	Synchronize signal input terminal for CPU interface
27	SELAD	O	Address select output terminal for CPU interface
28	—	—	Not used, open
29	MDISY	I	Reader synchronize signal input terminal
30	LD PWM	O	Laser power controlling PWM output terminal
31	DCIN WAKEUP	I	Charger wakeup detection signal input terminal
32	NRQ	I	Microprocessor service request input terminal
33	MDASCSY	I	MDA service selector signal input terminal
34	OPEN SW	I	Lid open detection input terminal (H:Open)
35	SCTSY	I	ADIP synchronize signal input terminal
36~42	—	—	Not used, open
43	CHARGE1	O	Recharging control output terminal
44~46	—	—	Not used, open
47	HOLD	I	HOLD SW input terminal (L: HOLD)
48	PLAY KEY	I	PLAY PAUSE KEY input/ wake up input terminal
49	REM KEY WAKEUP	I	REM KEY input/micro computer wake up input terminal
50	DOCTOR	I	Process inspection mode input terminal (L:Process inspection) (pulled up to V DD via resistor)

Downloaded from www.Manualslib.com manuals search engine

Pin No.	Mark	I/O Division	Function
51	BATT CHK LED	—	Battery check LED drive output terminal (Not used, open)
52	JITTER OK	—	Process inspection output terminal (Not used, open)
53	REG2	I	Model switching input terminal (L:MJ88, H:MJ80)
54	REG3	I	Recharge switching input terminal
55, 56	—	—	Not used, open
57	EEP CS	O	EEP ROM chip select output terminal
58	EEP CK	O	EEP ROM clock output terminal
59	EEP DATA O	O	EEP RAM DATA output terminal
60	EEP DATA I	I	EEP ROM DATA input terminal
61~64	—	—	Not used, open
65	MUTE A	O	Analog mute A output terminal
66	MUTE B	O	Analog mute B output terminal
67	NRF STBY	O	RF AMP standby output terminal
68	DRAM CHK	I	DRAM check input terminal
69, 70	—	—	Not used, open
71	MONI OFF	O	RF monitor control output terminal (H:OFF, L:ON)
72	BPF	O	RF band pass filter control output terminal (L:WIDE)
73	RF CONT	O	RF power supply control output terminal
74	MUTE MODE	—	Mute mode switching input terminal (Connected to GND)
75	POWER CNT	O	Power supply control output terminal
76	ELON	I	EL display control input terminal (L:ON)

Downloaded from www.Manualslib.com manuals search engine

Pin No.	Mark	I/O Division	Function
77	PC	O	4-ch. driver standby output terminal (L:Standby)
78	STBY2	O	FD/TR coil power supply control output terminal
79	BATTCHK	O	Battery check output terminal (Not used, open)
80	MSP RST	O	MSP reset output terminal (L:Reset)

12.4. IC301 (C0GBZ000006): FOCUS/TRACKING COIL/ TRAVERSE MOTOR DRIVE/ROTALY DETECTOR

Downloaded from www.Manualslib.com manuals search engine

Pin No.	Mark	I/O Division	Function
1	IN1R	I	H bridge 1 reverse input terminal
2	IN2F	I	H bridge 2 forward input terminal
3	IN2R	I	H bridge 2 reverse input terminal
4	STALL	I	Standby input terminal
5	STHB	I	H1, H2 bridge mute input terminal
6	SPVM1	I	Spindle power unit's power supply 1
7	SPUOUT	O	Spindle motor coil (U) output terminal
8	SPPG1	—	Spindle power unit's GND1
9	NC	—	Not used, open
10	SPVOUT	O	Spindle motor coil (V) output terminal
11	SPVM2	I	Spindle power unit's power supply 2
12	SPWOUT	O	Spindle motor coil (W) output terminal
13	SPPG2	—	Spindle power unit's GND2
14	PWVM	I	Half bridge power unit's power supply
15	PWOUT	O	Half bridge output terminal
16	PWPG	—	Half bridge power unit's GND
17	PWIN1	I	Half bridge1 input terminal

Downloaded from www.Manualslib.com manuals search engine

Pin No.	Mark	I/O Division	Function
18	SPUIN	I	SPIN detection comparator (U-phase) input terminal
19	SPVIN	I	SPIN detection comparator (V-phase) input terminal
20	SPWIN	I	SPIN detection comparator (W-phase) input terminal
21	SPCOM	I	SPIN motor coil neutral point input terminal
22	RIB	I	Soft switching gain control resistor terminal
23	CST	I	Startup oscillation capacitor terminal
24	CSL1	I	Slope capacitor connection terminal 1
25	CSL2	I	Slope capacitor connection terminal 2
26	FG	O	FG output terminal
27	BRK+	I	Brake comparator (+) input terminal
28	BRK-	I	Brake comparator (-) input terminal
29	ASGND	—	Small signal block GND (Bip.)
30	SGND	—	Small signal block GND (MOS)
31	S1	I	Stepping decorder 1 input terminal
32	S2	I	Stepping decorder 2 input terminal
33	S3	I	Stepping decorder 3 input terminal
34	BEMFU	O	Step detect comparator (U) output terminal
35	BEMFV	O	Step detect comparator (V) output terminal
36	BEMFW	O	Step detect comparator (W) output terminal
37	SLCOM	I	Step motor coil center input terminal
38	SLPG2	—	Stepping power unit's GND 2
39	SLWOUT	O	Stepping motor (W) output terminal

Downloaded from www.Manualslib.com manuals search engine

Pin No.	Mark	I/O Division	Function
40	SLVM2	I	Stepping power unit's power supply 2
41	SLVOUT	O	Stepping motor (V) output terminal
42	SLPG1	—	Stepping power unit's GND 1
43	SLUOUT	O	Stepping motor (U) output terminal
44	SLVM1	I	Stepping power unit's power supply 1
45	VCC 2	—	Small signal block power supply terminal 2 (Bip.)
46	VCC 1	—	Small signal block power supply terminal (MOS)
47	VG	O	Charge pump output terminal
48	C2M	—	Charge pump capacitor 2 terminal (-)
49	C2P	—	Charge pump capacitor 2 terminal (+)
50	CIM	—	Charge pump capacitor 1 terminal (-)
51	CIP	—	Charge pump capacitor 1 terminal (+)
52	EXTCLK	—	Synchronize clock input terminal (Not used, open)
53	NC	—	Not used, open
54	H2PG2	—	H bridge 2 power unit's GND 2
55	H2ROUT	O	H bridge 2 reverse output terminal
56	H2VM	I	H bridge 2 power unit's power supply
57	H2FOUT	O	H bridge 2 forward output terminal
58	H2PG1	—	H bridge 2 power unit's GND 1
59	H1PG2	—	H bridge 1 power unit's GND 2
60	H1ROUT	O	H bridge 1 reverse output terminal
61	H1VM	I	H bridge 1 power unit's power supply

Downloaded from www.Manualslib.com manuals search engine

Pin No.	Mark	I/O Division	Function
62	H1FOUT	O	H bridge 1 forward output terminal
63	H1PG1	—	H bridge 1 power unit's GND 1
64	IN1F	I	H bridge 1 forward input terminal

13. Caution in Use of Rechargeable Battery Ass'y

- Take Rechargeable Battery Ass'y out of Battery Carrying Case and use it.
- Be sure to carry Rechargeable Battery Carrying Case. If not, it may either heat or ignite by shorting with a metal. (as shown in Fig. 10)

Fig. 10

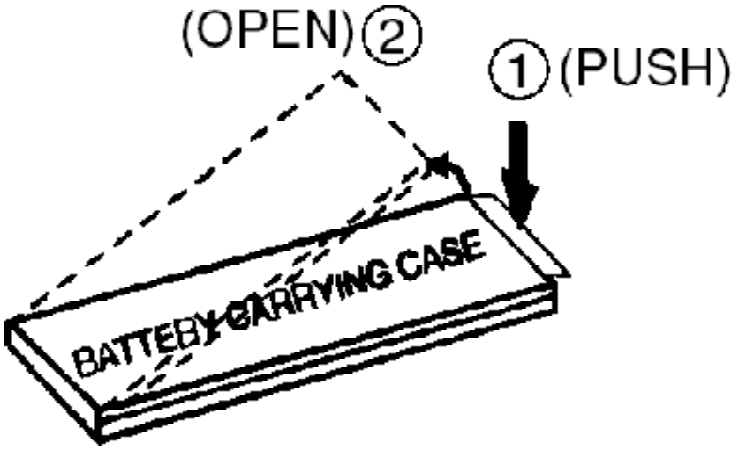

14. Supply of Rechargeable Battery Ass'y as Replacement Parts

Please take note of the following points relating to Battery Carrying Case to be used for protection of Rechargeable Battery Ass'y from shorting. Replacement Parts:

- Rechargeable Battery Ass'y (RP-BP62EYS1) supplied will be provided with Battery Carrying Case (RFA0475-Q).
- No replacement parts will be supplied for Rechargeable Battery Ass'y without Battery Carrying Case.

Downloaded from www.Manualslib.com manuals search engine

- **Replacement parts will be supplied for Battery Carrying Case (RFA0475-Q) without Rechargeable Battery Ass'y.**
- **To your customers, delivery Rechargeable Battery Ass'y together with Battery Carrying Case to prevent shorting accidents that may occur when Rechargeable Battery Ass'y is carried about Battery Carrying Case. (as shown in Fig. 11)**

Fig. 11

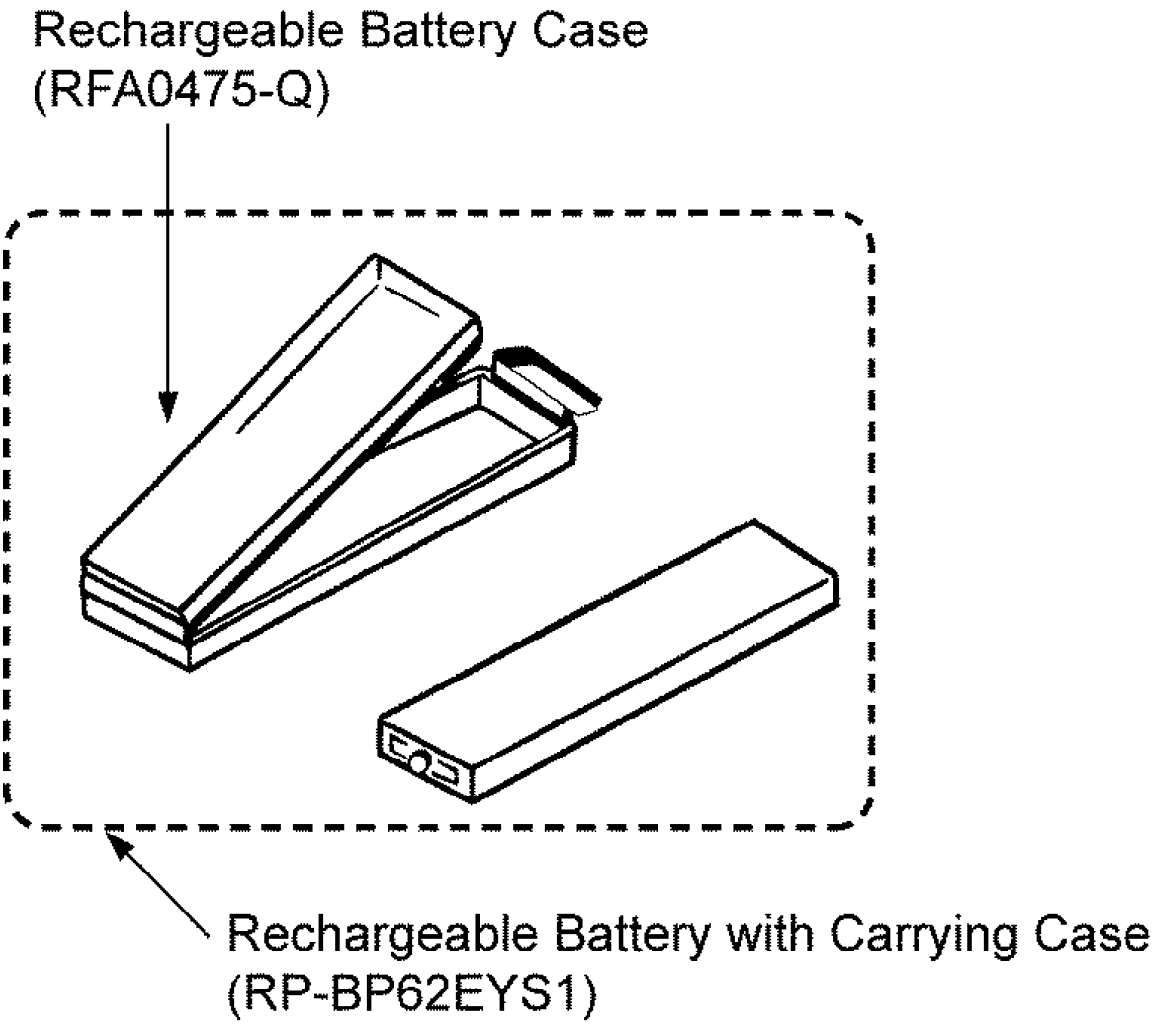

15. Replacement Parts List

Notes:
***Important safety notice:**
Components identified by ⚠ mark have special characteristics important for

Downloaded from www.Manualslib.com manuals search engine

safety.
***Furthermore, special parts which have purposes of fire-retardant (resistors), high-quality sound (capacitors), low-noise (resistors), etc. are used.**
***When replacing any of components, be sure to use only manufacture's specified parts shown in the parts list.**
***The parenthesized indications in the Remarks columns specify the areas. (Refer to the cover page for area.)**
***Warning: This product uses a laser diode. Refer to caution statements.**
***ACHTUNG:Die lasereinheit nicht zerlegen.Die lasereinheit darf nur gegen einc vom hersteller spezifizierte einheit ausgetauscht werden.**
***Capacity values are in microfarads (uF) unless specified otherwise, P=Pico-farads (pF) F=Farads (F)**
***Resistance values are in ohms, unless specified otherwise, 1K=1,000 (OHM), 1M =1,000K (OHM)**
***The marking <RTL> indicates that the Retention Time is limited for this item. After the discontinuation of this assembly in production, the item will continue to be available for a specific period of time. The retentionperiod of availability is dependant on the type of assembly, and in accordance with the laws governing part and product retention. After the end of this period, the assembly will no longer be available.**
***"<IA>" mark in Remarks indicates languages of instruction manuals. [<IA>:English/Spanish/French/German/Netherlands/Swedish/Italian/Danish]**

Ref. No.	Part No.	Part Name & Description	Pcs	Remarks
1	RHD14088-S	SCREW	4	
2	RXQ0715-1	LINK UNIT(L)	1	
3	RXQ0716-1	LINK UNIT(R)	1	
4	RYF0563Z-S	DISC COVER	1	
5	RYQ0333-S	INTERMEDIATE CABINET	1	
5-1	RGV0267-S	OPEN KNOB	1	
6	RYK1039A-S	CABINET ASS'Y	1	
6-1	RGK1309-S	JACK PIECE	1	
6-2	RGU1916-S	OPERATION BUTTON	1	
6-3	RGU1917-S	VOLUME BUTTON	1	
6-4	RGV0268-S	HOLD KNOB	1	
7	RHD14076-S	SCREW	6	
8	RKK0141-S	RECHARGEABLE BATT.COVER	1	
9	RDG0477	INTERMEDIATE GEAR	1	
10	RHD14078	SCREW	1	
11	RHW11011	WASHER	1	
12	RMC0392-2	SPRING	1	
13	RXK0324	TRAVERSE UNIT	1	
13-1	BRL1A1CWB	TRAVERSE MOTOR	1	
13-2	RHD14074	SCREW	1	
13-3	RJC99038	RECHARGE.BATT.TERMINAL(-)	1	
13-4	XQN14+B2FC	SCREW	1	

Downloaded from www.Manualslib.com manuals search engine

Ref. No.	Part No.	Part Name & Description	Pcs	Remarks
13-5	RMX0156-1	STOPPER RUBBER	1	
14	RJR0195-2	BATTERY SHAFT	1	
15	RAF2000A-M	OPTICAL PICKUP	1	⚠
16	RXJ0025	DRIVE SHAFT	1	
17	RHD14067	SCREW	5	
18	RJC99039	RECHARGE.BATT.TERMINAL(+)	1	
A1	RP-BP62EYS1	RECHARGEABLE BATT.ASS'Y	1	
A1-1	RFA0475-Q	RECHARGEABLE BATT.CASE	1	
A2	K3ZZ00200038	EXTERNAL BATTERY CASE	1	
A3	RFC0056-K	CARRING CASE	1	
A4	RFEV025P-SM	WIRED REMOTE CONTROL	1	
A4-1	RYQ0312-W	REMOCON.CLIP	1	
A5	L0BAB0000162	STEREO EARPHONES	1	
A6	RP-BC155AEBY	CHARGER	1	(EB)
A6	RP-BC155AEYB	CHARGER	1	(EG)
A7	RQT5683-B	INSTRUCTION MANUAL	1	<IA>
A8	RQCB0169	SERVICE CENTER LIST	1	
C5	RCST0GZ226RG	4V 22U	1	F3E0G226A002
C6	ECUVNJ105KBV	63V 1U	1	F1H0J105A002
C7,C8	ECUVNA224KBV	10V 0.22U	2	F1H1A224A028
C9	ECUVNJ474KBV	63V 0.47U	1	F1H0J474A002
C13	ECUENA104KBQ	10V 0.1U	1	F1G1A104A014
C14	ECUE1H102KBQ	50V 1000P	1	F1G1H102A457
C19	ECUENA104KBQ	10V 0.1U	1	F1G1A104A014
C20	RCST0GZ106RG	4V 10U	1	F3E0G106A002
C23	ECUENA104KBQ	10V 0.1U	1	F1G1A104A014
C24	ECUE1C103KBQ	16V 0.01U	1	
C28	RCST0GZ106RG	4V 10U	1	F3E0G106A002
C65	ECUENH272KBQ	50V 2700P	1	
C66	ECUENA823KBQ	10V 0.082U	1	
C101	ECUE1C223KBQ	16V 0.022U	1	F1G1C223A044
C102	ECUE1C103KBQ	16V 0.01U	1	
C103	ECUENA104KBQ	10V 0.1U	1	F1G1A104A014
C105	ECUVNA224KBV	10V 0.22U	1	F1H1A224A028
C106	ECUENA104KBQ	10V 0.1U	1	F1G1A104A014
C107	RCST0GZ106RG	4V 10U	1	F3E0G106A002
C110,11	ECUE1E682KBQ	25V 6800P	2	
C114	ECUENA104KBQ	10V 0.1U	1	F1G1A104A014
C116	ECUE1C822KBQ	16V 8200P	1	F1G1C8220002
C117,18	ECUENA104KBQ	10V 0.1U	2	F1G1A104A014
C119	RCST0EX227RE	2.5V 220U	1	F3G0E2270001
C201	ECUE1C103KBQ	16V 0.01U	1	
C202	ECUE1H101KBQ	50V 100P	1	
C203	RCST0GZ106RG	4V 10U	1	F3E0G106A002
C204	ECUENA104KBQ	10V 0.1U	1	F1G1A104A014
C206	ECUE1H101KBQ	50V 100P	1	
C210	ECUE1C103KBQ	16V 0.01U	1	
C211	ECUVNJ474KBV	63V 0.47U	1	F1H0J474A002
C212	ECUE1C103KBQ	16V 0.01U	1	
C303	RCST0GZ226RG	4V 22U	1	F3E0G226A002
C304-06	ECUENA104KBQ	10V 0.1U	3	F1G1A104A014
C307	RCST0GZ106RG	4V 10U	1	F3E0G106A002

Downloaded from www.Manualslib.com manuals search engine

Ref. No.	Part No.	Part Name & Description	Pcs	Remarks
C308	ECUENA104KBQ	10V 0.1U	1	F1G1A104A014
C309-11	ECUENC333KBQ	16V 0.033U	3	F1G1C333A004
C318	ECUVNJ274KBV	63V 0.27U	1	F1H0J2740001
C319,20	ECUENA104KBQ	10V 0.1U	2	F1G1A104A014
C323-25	ECUE1H222KBQ	50V 2200P	3	F1G1H222A457
C330-33	ECUVNJ105KBV	63V 1U	4	F1H0J105A002
C401	F3Z0J336A002	6.3V 33U	1	
C402	RCST0GZ106RG	4V 10U	1	F3E0G106A002
C404	F3Z0J336A002	6.3V 33U	1	
C405	F3Z0J106A001	6.3V 10U	1	
C406,07	RCST0GZ106RG	4V 10U	2	F3E0G106A002
C410	ECUENA104KBQ	10V 0.1U	1	F1G1A104A014
C411,12	ECUE1C103KBQ	16V 0.01U	2	
C501	RCST0GZ106RG	4V 10U	1	F3E0G106A002
C502	ECUENA104KBQ	10V 0.1U	1	F1G1A104A014
C503,04	ECUVNJ105KBV	63V 1U	2	F1H0J105A002
C505	RCST0GZ106RG	4V 10U	1	F3E0G106A002
C506	ECUVNJ105KBV	63V 1U	1	F1H0J105A002
C507,08	RCST0EX227RE	2.5V 220U	2	F3G0E2270001
C509	RCST0GZ106RG	4V 10U	1	F3E0G106A002
C511,12	ECUE1H331KBQ	50V 330P	2	F1G1H331A402
C515,16	ECUVNA224KBV	10V 0.22U	2	F1H1A224A028
C517	RCST0GZ475RG	4V 4.7U	1	F3E0G475A002
C523,24	ECUENA104KBQ	10V 0.1U	2	F1G1A104A014
CP1	RJS2A7121T	CONNECTOR(21P)	1	K1MN21B00028
CP301,02	RJS2A7104T	CONNECTOR(4P)	2	K1MN04A00014
D401	RB491DT146	DIODE	1	B0JCMC000004
D402,03	RB081L20TE25	DIODE	2	B0JCRC000002
IC1	AN8677FHKEBV	IC	1	
IC101	MN66620RF	IC	1	
IC201	MN101C32GAE	IC	1	
IC202	AK93C45BH-L	IC	1	C3EBCG000028
IC203	C0EBC0000032	IC	1	
IC301	C0GBZ0000006	IC	1	
IC401	XC6367A151MR	IC	1	C0DBAFZ00012
IC402	C0DBAFZ00017	IC	1	
IC501	TA2131FL	IC	1	
JK501	RJJ36TA02-C	JACK,HEADPHONE	1	K2HC106E0003
L201	RLQP100MT-W	COIL	1	G1C100M00016
L305	ELJEA470KF	COIL	1	
L401	RLQP100MT-W	COIL	1	G1C100M00016
L402	RLZ0038T-T	COIL	1	G1C270MA0011
L403	RLQP100MT-W	COIL	1	G1C100M00016
L406	ELJEA470KF	COIL	1	
L501,02	RLBV601V-W	COIL	2	J0JCC0000059
P1	RPK1522	PACKING CASE	1	
P2	RPQ0575	PAD	1	
P3	RPF0257-1	PROTECTION BAG(UNIT)	1	

Downloaded from www.Manualslib.com manuals search engine

Ref. No.	Part No.	Part Name & Description	Pcs	Remarks
PCB1	REP3063A-M	MAIN P.C.B.ASS'Y	1	(RTL)
Q1	2SB1295-6-TB	TRANSISTOR	1	B1ADKB000001
Q5	XP152A12C0MR	TRANSISTOR	1	B1DHAC000002
Q201	2SD1819ASTX	TRANSISTOR	1	2SD1819ASL
Q202	2SB1295-6-TB	TRANSISTOR	1	B1ADKB000001
Q401	XP151A13A0MR	TRANSISTOR	1	B1DFBC000003
Q402,03	XP152A12C0MR	TRANSISTOR	2	B1DHAC000002
Q404,05	XP151A13A0MR	TRANSISTOR	2	B1DFBC000003
Q406,07	2SB1218ASTX	TRANSISTOR	2	2SB1218ASL
Q408	XP4601TX	TRANSISTOR	1	XP0460100L
R2	ERJ2GEJ471X	1/4W 470	1	ERJ2RMJ471X
R5	ERJ2GEJ1R0X	1/4W 1	1	ERJ2RMJ1R0X
R6	ERJ2GEJ103X	1/4W 10K	1	ERJ2RMJ103X
R7	ERJ2GEJ223X	1/4W 22K	1	ERJ2RMJ223X
R8	ERJ2GEJ474X	1/4W 470K	1	ERJ2RMJ474X
R102	ERJ2GEJ221X	1/4W 220	1	ERJ2RMJ221X
R103	ERJ2GEJ123X	1/4W 12K	1	
R104	ERJ2GEJ333X	1/4W 33K	1	ERJ2RMJ333X
R105	ERJ2GEJ221X	1/4W 220	1	ERJ2RMJ221X
R106	ERJ2GEJ105X	1/4W 1000K	1	D0GA105JA001
R110,11	ERJ2GEJ102X	1/4W 1K	2	ERJ2RMJ102X
R201	ERJ2GEJ103X	1/4W 10K	1	ERJ2RMJ103X
R202	ERJ2GEJ473X	1/4W 47K	1	ERJ2RMJ473X
R203	ERJ2GEJ221X	1/4W 220	1	ERJ2RMJ221X
R204	ERJ2GEJ332X	1/4W 3.3K	1	ERJ2RMJ332X
R205	ERJ2GEJ682X	1/4W 6.8K	1	ERJ2RMJ682X
R206	ERJ2GEJ223X	1/4W 22K	1	ERJ2RMJ223X
R207	ERJ2GEJ471X	1/4W 470	1	ERJ2RMJ471X
R208	EXB24V224JX	1/16W 220K	1	
R210	ERJ2GEJ104X	1/4W 100K	1	ERJ2RMJ104X
R218	ERJ2GED273X	1/4W 27K	1	ERJ2RHD273X
R219	ERJ2GEJ104X	1/4W 100K	1	ERJ2RMJ104X
R221	EXB24V103JX	1/16W 10K	1	
R222	EXB24V224JX	1/16W 220K	1	
R225	ERJ2GEJ223X	1/4W 22K	1	ERJ2RMJ223X
R301	ERJ2GEJ103X	1/4W 10K	1	ERJ2RMJ103X
R302	ERJ2GEJ1R0X	1/4W 1	1	ERJ2RMJ1R0X
R303	ERJ2GEJ682X	1/4W 6.8K	1	ERJ2RMJ682X
R304	ERJ2GEJ471X	1/4W 470	1	ERJ2RMJ471X
R313	EXB24V473JX	1/16W 47K	1	
R401	ERJ2GEJ225X	1/4W 2.2M	1	ERJ2RMJ225X
R402,03	EXB24V474JX	1/16W 470K	2	
R404	ERJ2GEJ274X	1/4W 270K	1	D0GA274JA001
R405	ERJ2GEJ105X	1/4W 1000K	1	D0GA105JA001
R406	EXB24V474JX	1/16W 470K	1	
R407	ERJ2GEJ103X	1/4W 10K	1	ERJ2RMJ103X
R408	ERJ3GEYJ101V	1/16W 100	1	
R409	EXB24V474JX	1/16W 470K	1	
R501	EXB24V392JX	1/16W 3.9K	1	
R504	EXB24V103JX	1/16W 10K	1	
R506	ERJ3GEYJ225V	1/16W 2.2M	1	

Downloaded from www.Manualslib.com manuals search engine

Ref. No.	Part No.	Part Name & Description	Pcs	Remarks
R507	EXB24V100JX	1/16W 10	1	
R509	ERJ2GEJ221X	1/4W 220	1	ERJ2RMJ221X
R512	ERJ3GEYJ225V	1/16W 2.2M	1	
S201,02	RSG0051-P	SW,VOLUME +,-	2	
S203,04	EVQPUL02K	SW,SKIP/SEARCH	2	
S206	EVQPUL02K	SW,PLAY/STOP	1	
S207	RSH1A039-A	SW,COVER OP/CL DET.	1	K0L1BA000037
S208	RSS2A010-1A	SW,HOLD	1	K0D112B00071
X101	H2D169500012	OSCILLATOR	1	
X201	H2D400400010	OSCILLATOR	1	
Z401	RJH9212-1	CONNECTOR TERM.	1	
Z402	K4ZZ01000154	CONNECTOR	1	

16. Cabinet Parts Location

17. Packaging

H010200000 SW/HH

1 © 2001 Matsushita Electric Industrial Co., Ltd. All rights reserved.
Unauthorized copying and distribution is a violation of law.

Downloaded from www.Manualslib.com manuals search engine